RZ42 (17AAFACS333) (2020)

TABLE OF CONTENTS

Battery 3
Clutch Keeper 5
Deck 7
Deck Covers 10
Deck Lift 12
Discharge Chute 14
Drive 16
Electrical 19
Engine Accessories 21
Evap Hose 24
Floor Board 26
Frame 28
Front Caster 30
Fuel Tank 32
Hour Meter 34
Key 36
Label Map 38
Lap Bars 40
Lapbar Adjustment 42
Lift Assist 44
Operator Control 46
Platform 48
Seat 50
Seat Adjustment 52
Spindle 54
Wheel - Rear 56
Wheel-Front 58

Battery

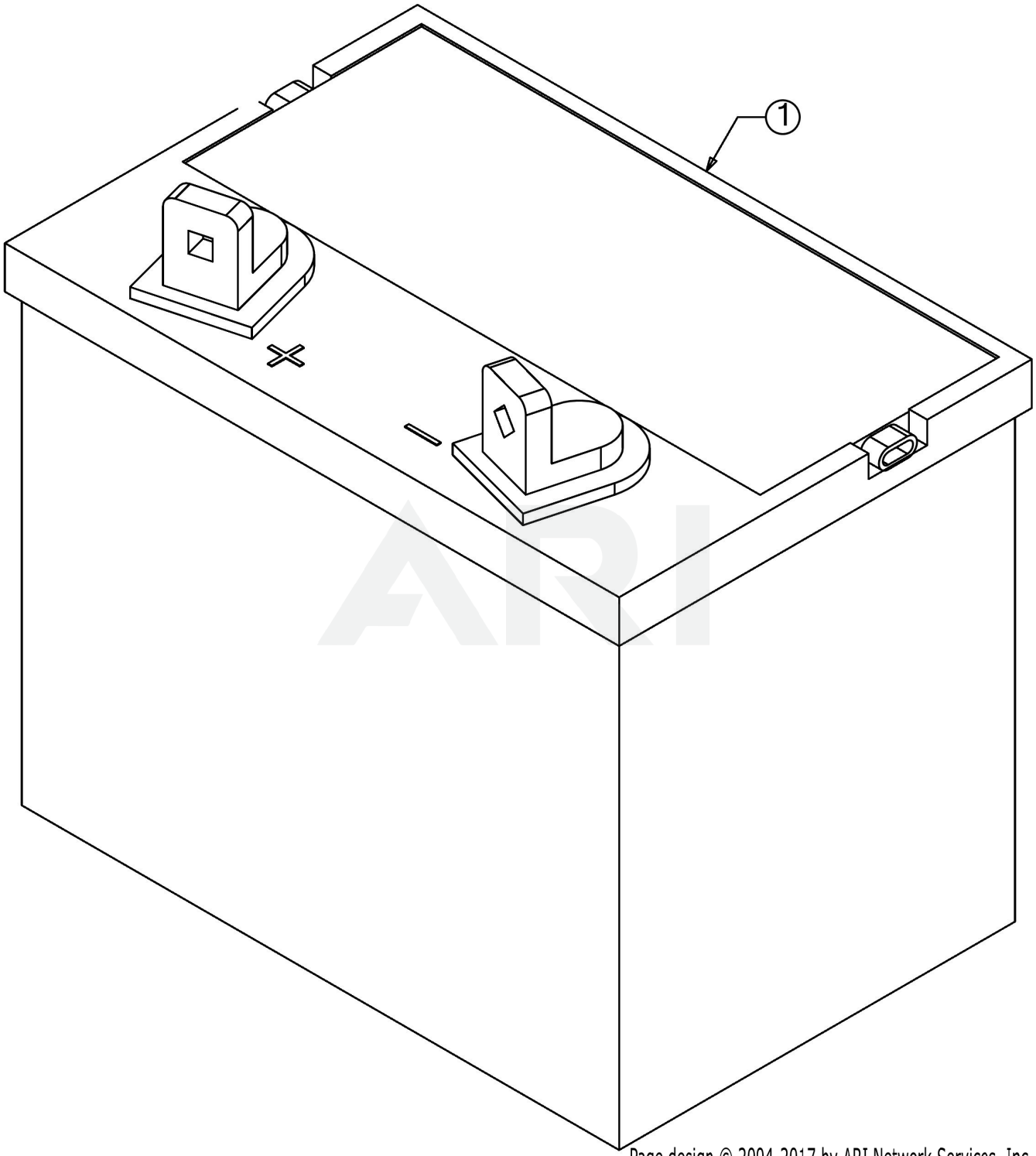

Page design © 2004-2017 by ARI Network Services, Inc.

Battery

Ref Number	Part Number	Part Description	Context Notes	Quantity
1	925-1707D	BATTERY		1

Clutch Keeper

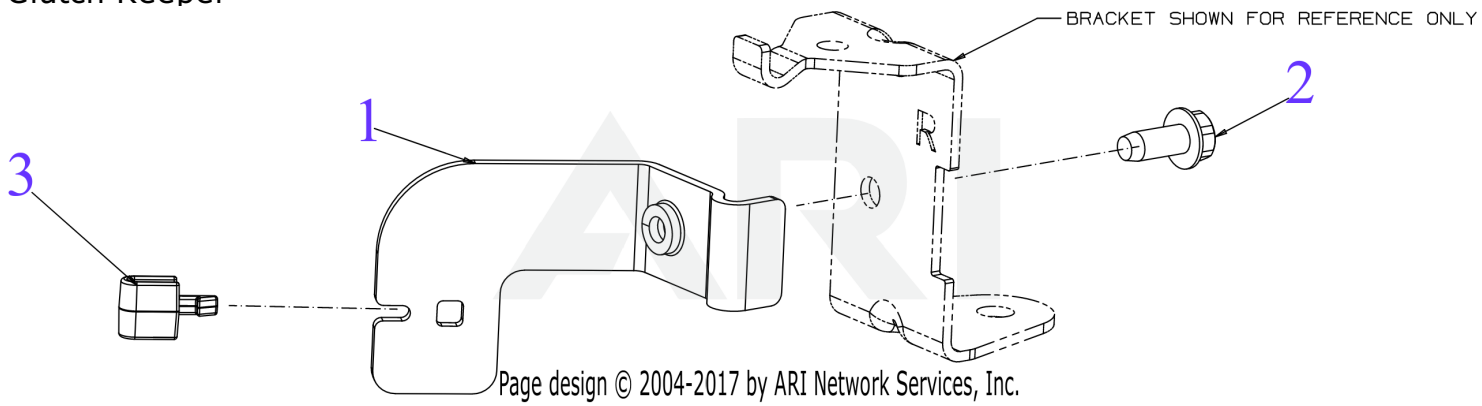

Page design © 2004-2017 by ARI Network Services, Inc.

Clutch Keeper

Ref Number	Part Number	Part Description	Context Notes	Quantity
1	703-14922	CLUTCH STOP BRACKET		1
2	710-06256	SCREW M8-1.25 x .750		1
3	731-10576	CLUTCH BRACKET GROMMET		1

Deck

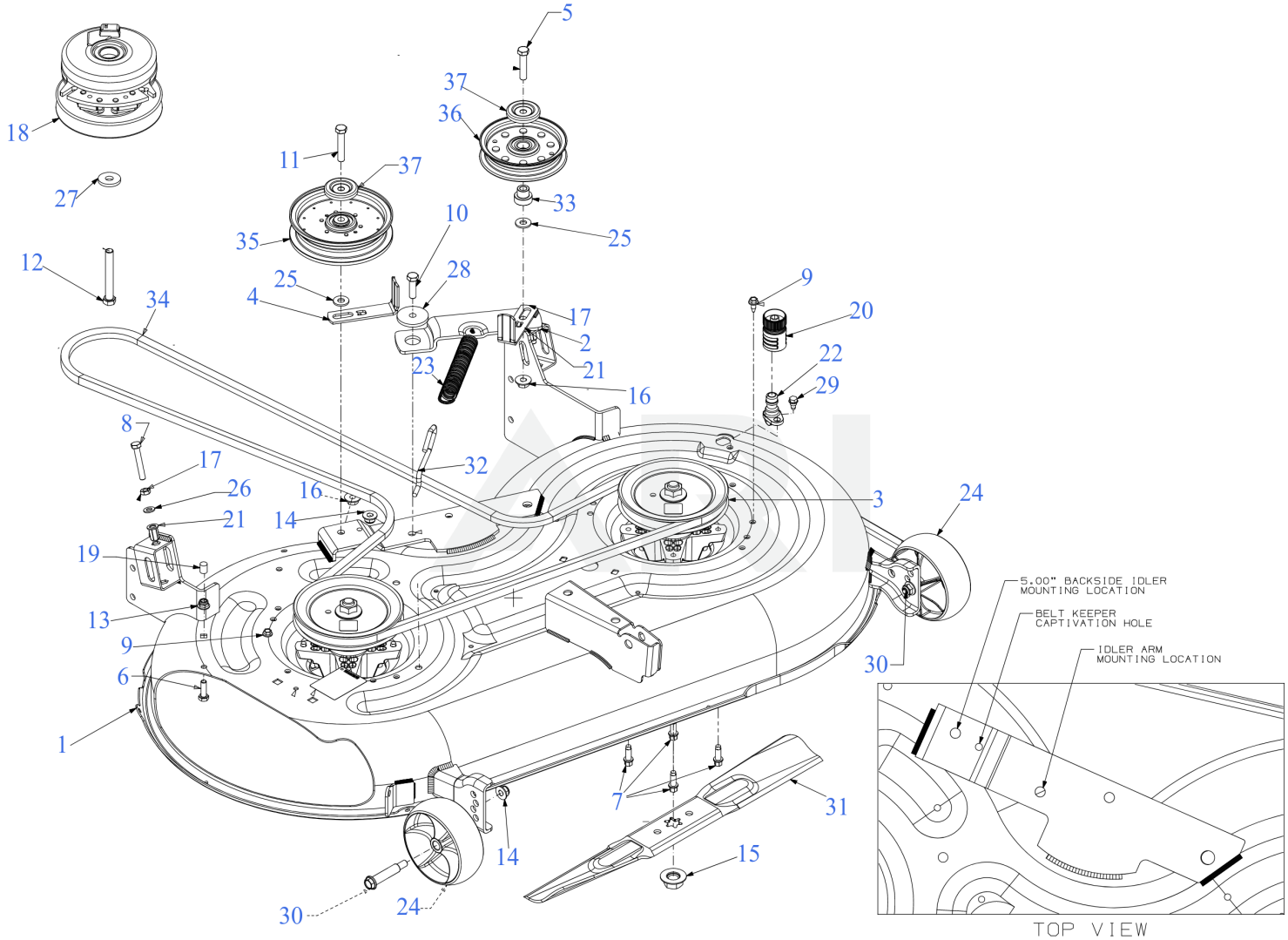

Page design © 2004-2017 by ARI Network Services, Inc.

Deck

Ref Number	Part Number	Part Description	Context Notes	Quantity
1	603P05741	42" DECK SHELL	*CHOOSE COLOR WHEN ORDERING*	1
2	603P06259A	IDLER PIVOT BRACKET		1
3	918-04822B	SPINDLE ASSEMBLY	(See Separate Breakdown)	2
3	490-130-C002	Cub Cadet SPINDLE ASSEMBLY	Retail Packaged Part	
4	703-09583	BELT GUARD BRACKET	*CHOOSE COLOR WHEN ORDERING*	1
5	710-0347	HEX SCREW 3/8-16 x 1.75 GR5		1
6	710-0376	SCREW 5/16-18 x 1.0 GR5		1
7	710-06322	SCREW 5/16-18 x .875		8
8	710-07494	SCREW-FULL THREAD 5/16-18 GR5		2
9	710-1652	SCREW 1/4-20X.625		2
10	710-3005	SCREW 3/8-16 x 1.25 GR5		1
11	710-3144	SCREW 3/8-16 x 2.0 GR5		1
12	710-3157A	SCREW 7/16-20 x 3.25 GR5		1
13	712-04063	FLANGE LOCK NUT 5/16-18		1
14	712-04065	NUT		3
15	712-0417A	HEX NUT		2
16	712-04217	FLANGE LOCK NUT		2
17	712-3007	HEX NUT		2
18	917-05121	ELECTRIC PTO CLUTCH		1
19	720-05010	VINYL CAP		1
20	921-04041	WATER NOZZLE ADAPTER		1
21	728-05043	NUT RIVET 5/16-18		2
22	731-07487	DECK WASH NOZZLE		1
23	732-05484	EXTENSION SPRING .94 x 6.75 RZT		1
24	734-06305	DECK WHEEL (5.0 DIA x 1.875)		2

Ref Number	Part Number	Part Description	Context Notes	Quantity
25	736-0262	FLAT WASHER .385X.870X.090		2
26	736-0264	FLAT WASHER		2
27	736-0322	FLAT WASHER .445 x 1.248 x .170		1
28	738-04162C	SHOULDER SPACER		1
29	738-04502	SHOULDER SCREW 1/4-20 x .50		1
30	738-06694	SHOULDER BOLT (.50 X 2.0 x 3/8 -16)		2
31	942-04312A	21.23" BLADE (2N1)		2
31	490-110-C109	Cub Cadet BLADE SET-42" OFFS	Retail Packaged Part	
31	942-04312-X	21.23" BLADE (XTREME)		
31	942-04312-L	42" 6 PT STAR LOW LIFT/SAND BLADE		
31	490-110-C180	Cub Cadet 42" LOWLIFT BLADE SET	Retail Packaged Part	
31	490-110-M180	Genuine Factory Parts 42" LOWLIFT BLADE SET	Retail Packaged Part	
32	747-08710	DECK SPRING HOOK		1
33	748-05029A	SHOULDER SPACER		1
34	754P06134	V-BELT A SEC x 117.0		1
34	490-501-C081	Cub Cadet 42" RZT DECK BELT	Retail Packaged Part	
34	490-501-Y081	Troy-Bilt 42" RZT DECK BELT	Retail Packaged Part	
35	756-04511B	FLAT IDLER PULLEY		1
36	756-05042	IDLER PULLEY 4.25 DIA		1
37	783-08389	IDLER PULLEY CAP		2

Deck Covers

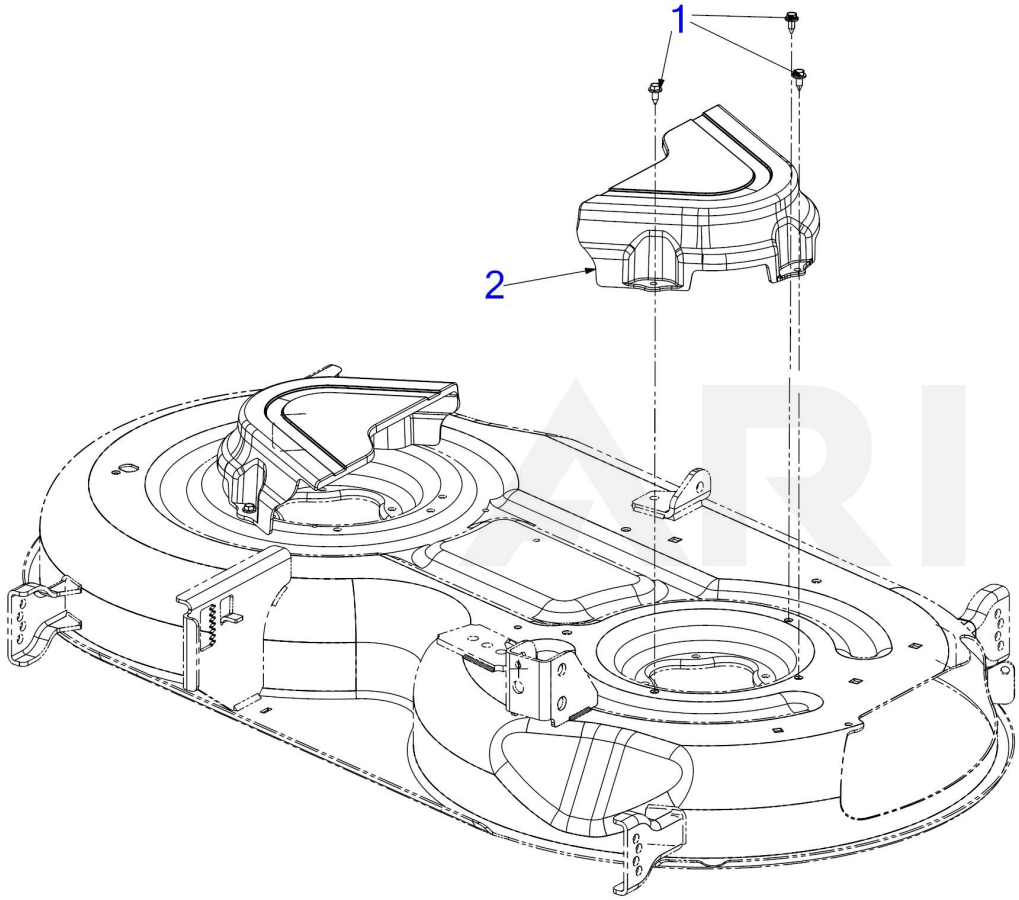

Page design © 2004-2017 by ARI Network Services, Inc.

Deck Covers

Ref Number	Part Number	Part Description	Context Notes	Quantity
1	710-1652	SCREW 1/4-20X.625		6
2	731-08698A	BELT COVER		2

Deck Lift

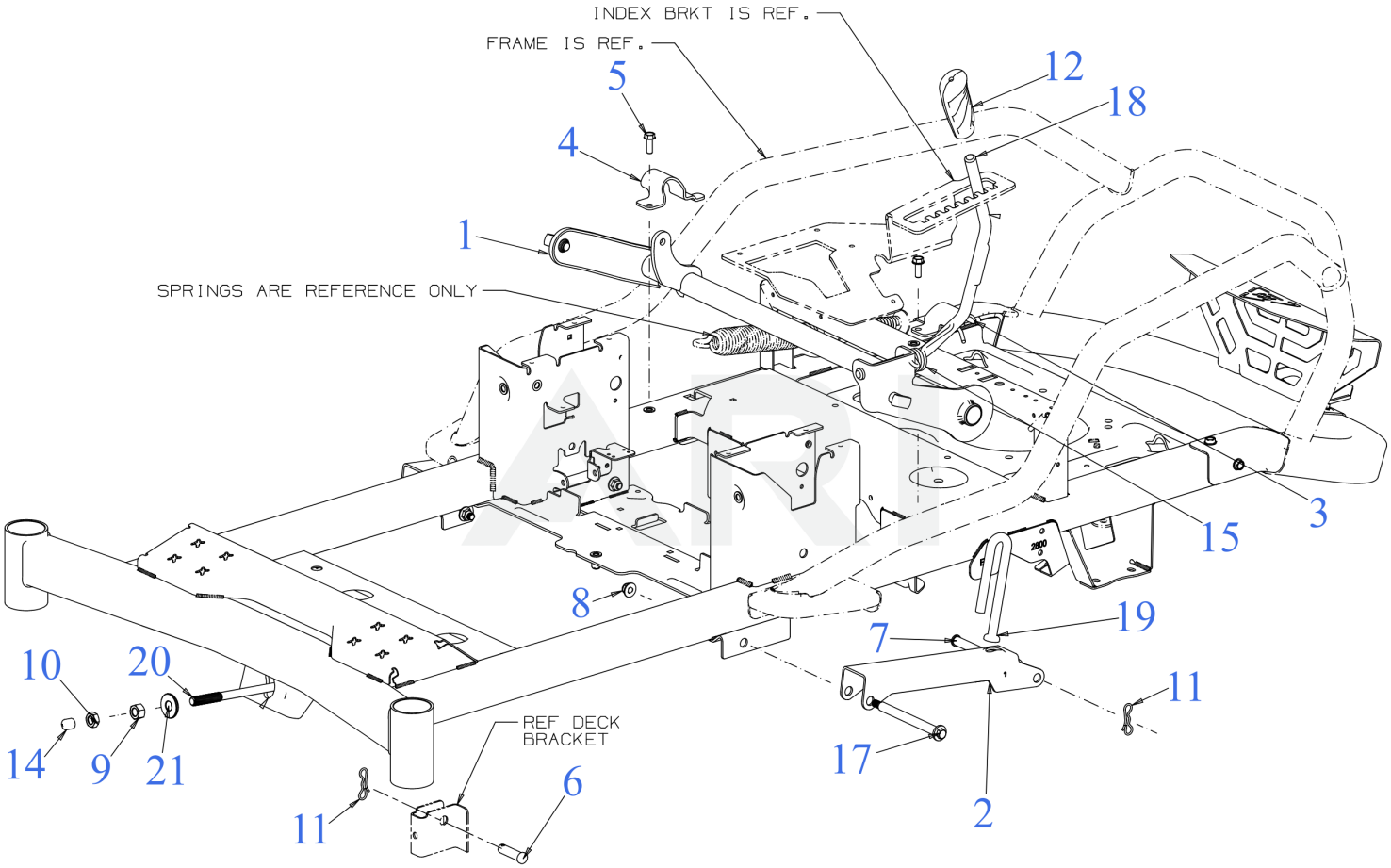

Page design © 2004-2017 by ARI Network Services, Inc.

Deck Lift

Ref Number	Part Number	Part Description	Context Notes	Quantity
1	647-05573	LIFT SHAFT	*CHOOSE COLOR WHEN ORDERING*	1
2	703-13343	DECK LIFT LINK	*CHOOSE COLOR WHEN ORDERING*	2
3	703-14861	LIFT SHAFT (RETAINER) (LH)		1
4	703-14961	LIFT SHAFT (RETAINER) (RH)		1
5	710-1238	SCREW 5/16-18 x .875 GR5		2
5	710-0817	SCREW 5/16-18 x 1.25		
6	711-0231A	CLEVIS PIN .500 x 1.875		1
7	711-04007A	CLEVIS PIN .50 x 2.5		2
8	712-04065	NUT		2
9	712-05046	HEX NUT NYLOK 1/2-13		1
10	712-3048	HEX NUT		1
11	714-05005	BOW TIE COTTER PIN		3
12	720-05702	LIFT HANDLE GRIP		1
14	726-05009	LIFT ROD END CAP		1
15	732-07326	TORSION SPRING		1
17	738-06154	SHLDER SCREW .498x5.0 3/8-16		2
18	747-10390	DECK LIFT HANDLE		1
19	747-07210	HANGER LINK ROD		2
20	747-07370	DECK FRONT LIFT ROD		1
21	748-04069A	DECK LIFT PIVOT CUP		1

Discharge Chute

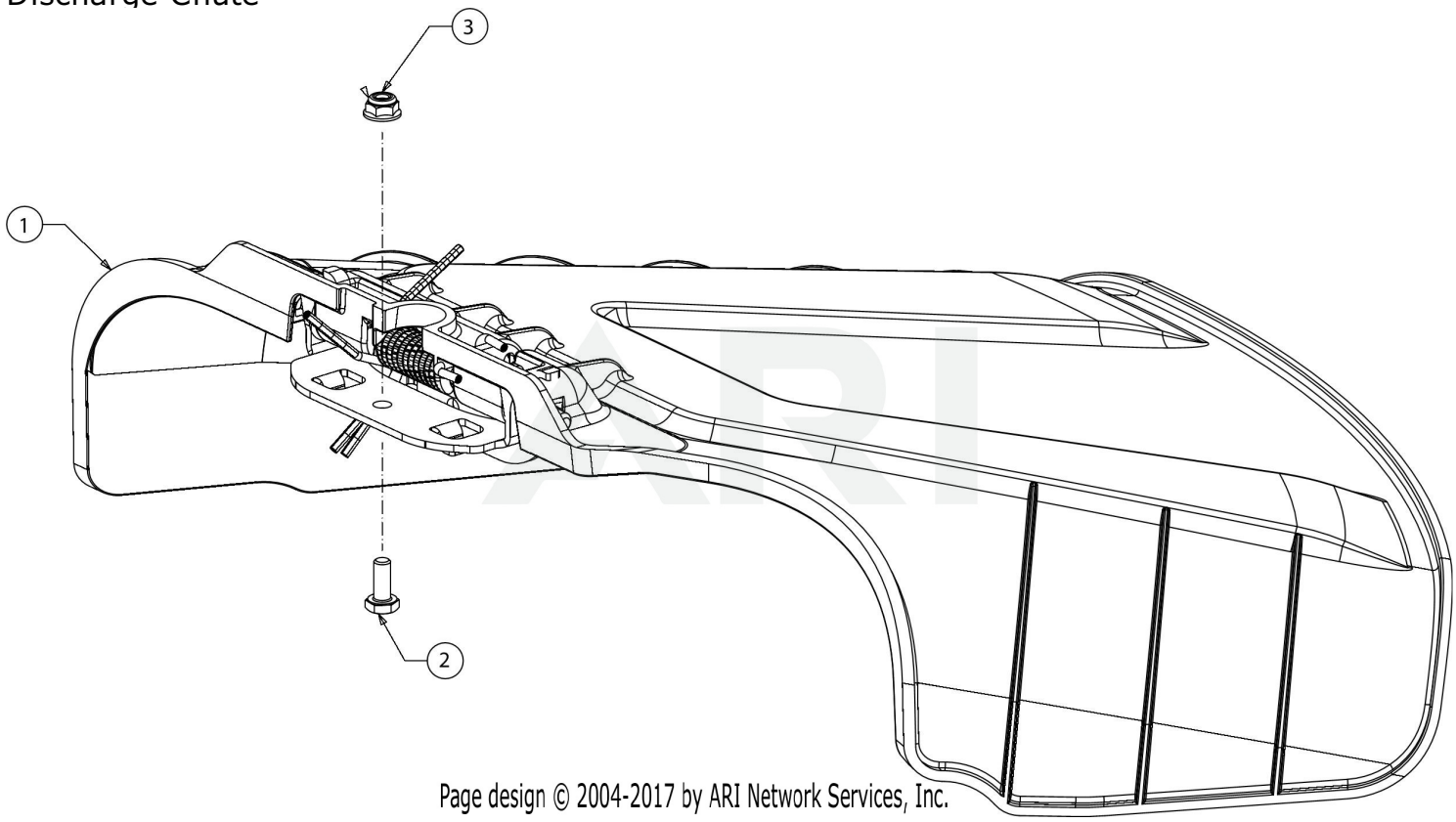

Page design © 2004-2017 by ARI Network Services, Inc.

Discharge Chute

Ref Number	Part Number	Part Description	Context Notes	Quantity
1	631-04354B	CHUTE ASSEMBLY		1
1	726-04009	PUSH CAP	(Not Shown)	1
1	732-05261	TORSION SPRING	(Not Shown)	1
1	747-06290B	CHUTE HINGE PIN	(Not Shown)	1
1	783-08504A	CHUTE MOUNTING BRACKET	(Not Shown)	1
2	710-0751	SCREW 1/4-20 x .620 GR5		1
3	712-04064	FLANGE LOCK NUT		1

Drive

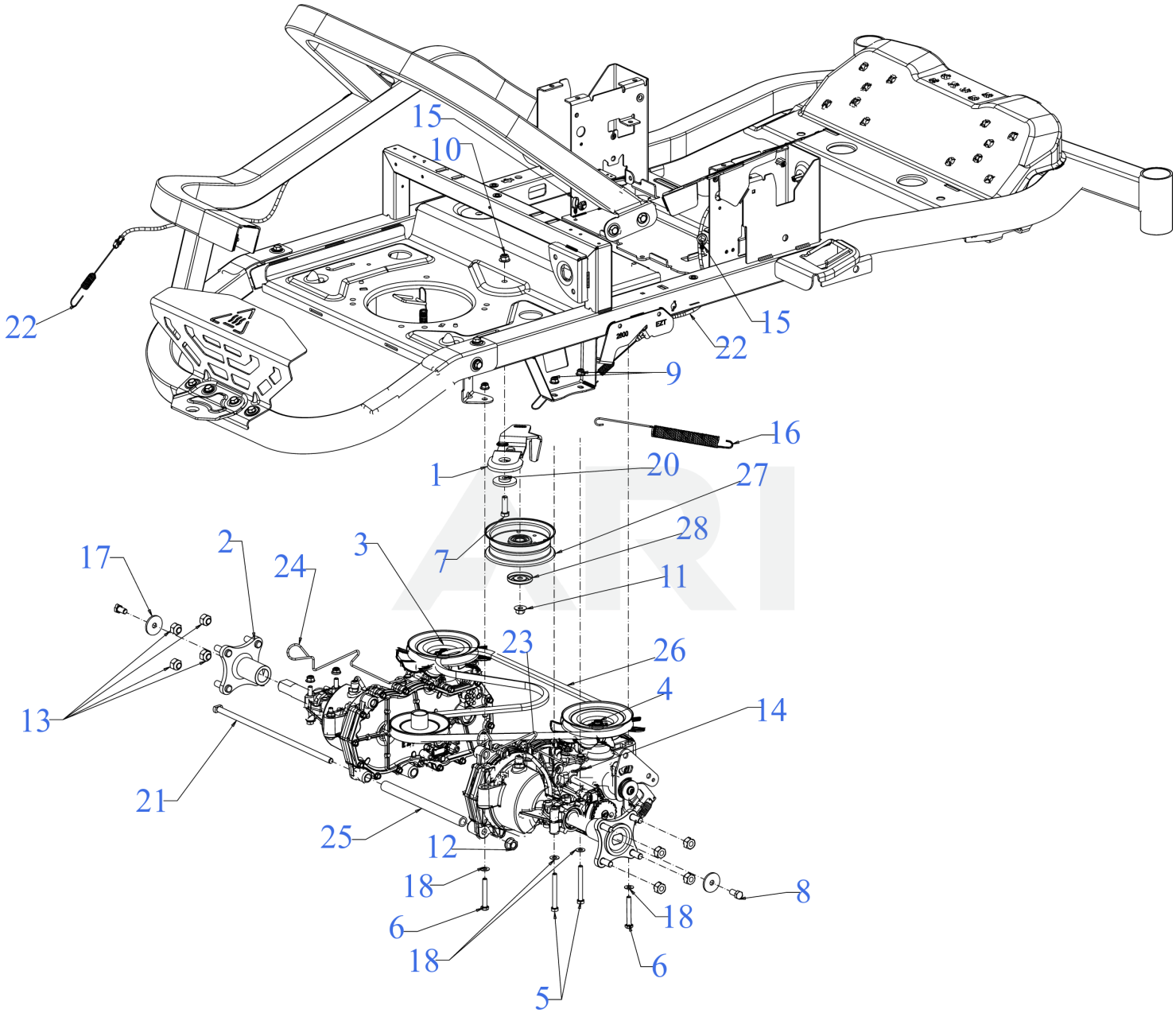

Page design © 2004-2017 by ARI Network Services, Inc.

Drive

Ref Number	Part Number	Part Description	Context Notes	Quantity
1	603P05879A	DRIVE IDLER BRACKET ASSEMBLY		1
2	918-04317	WHEEL HUB ASSEMBLY		2
2	710-0852	STUD 7/16-14 x 1.6	(Not Shown)	4
3	618P07913	HYDRO TRANSMISSION (LH)	(See Separate Breakdown) (Cub Cadet Only)	1
4	618P07914	HYDRO TRANSMISSION (RH)	(See Separate Breakdown) (Cub Cadet Only)	1
5	710-0176	HEX SCREW 5/16-18 x 2.75		4
6	710-0395	HEX SCREW 5/16-18 x 2.25 GR5		4
7	710-3005	SCREW 3/8-16 x 1.25 GR5		1
8	710-3119	SCREW 3/8-16 x .75 GR 5		2
9	712-04063	FLANGE LOCK NUT 5/16-18		8
10	712-04065	NUT		1
11	712-04217	FLANGE LOCK NUT		1
12	712-0459	FLANGE LOCK NUT		1
13	712-3050	LUG NUT 7/16-14		8
14	714-04040	BOW TIE COTTER PIN 1/4-5/16		2
15	726-3055	CABLE RETAINER CLIP		2
16	732-06226	EXTENSION SPRING .75 DIA X 10.27		1
17	936-0227	FLAT WASHER		2
18	736-0278	FLAT WASHER		8
20	738-04162C	SHOULDER SPACER		1
21	738-05314	SUPPORT TUBE ROD		1
22	746P05631	PARK BRAKE CABLE		2
23	747-07690A	HYDRO BYPASS ROD (RH)		1

Ref Number	Part Number	Part Description	Context Notes	Quantity
24	747-08130A	HYDRO BYPASS ROD (LH)		1
25	750-07210	SUPPORT TUBE		1
26	754P05874	BELT-TRANS DRIVE A x 69.1		1
26	490-501-C089	Cub Cadet DRIVE BELT (-05874)	Retail Packaged Part	
27	756-05034A	IDLER PULLEY 4.50" DIA		1
28	783-08389	IDLER PULLEY CAP		1

Electrical

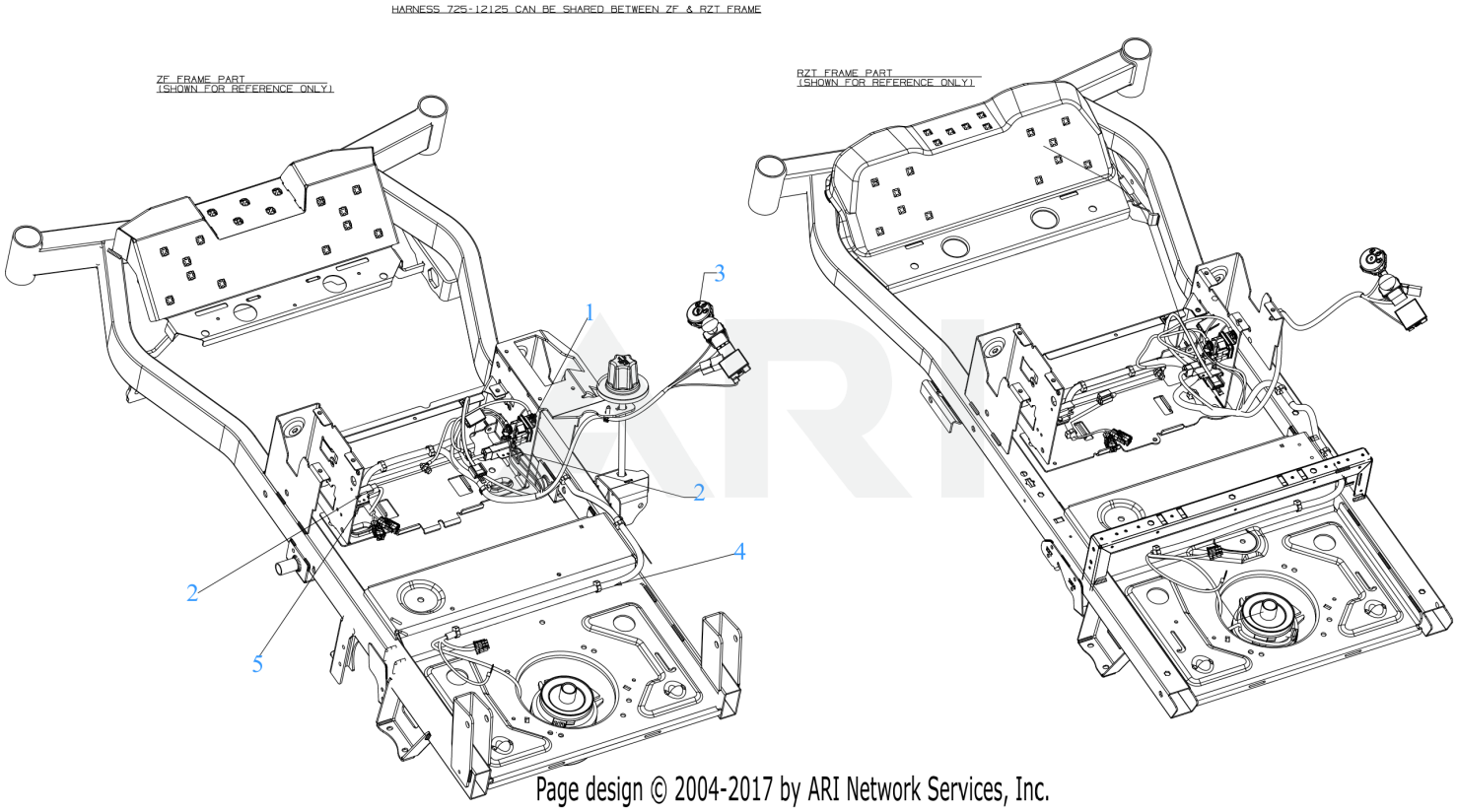

Page design © 2004-2017 by ARI Network Services, Inc.

Electrical

Ref Number	Part Number	Part Description	Context Notes	Quantity
1	710-06133	SCREW M6-1 x .625		1
2	725-04363	INTERLOCK SWITCH (NO/NC)		2
3	725P12066	KEY SWITCH (3 POS 6 PIN)		1
4	725P12125	MAIN HARNESS		1
4	725-06153	SOLENOID-12V 100A		
5	738-04237A	SHOULDER SCREW		2

Engine Accessories

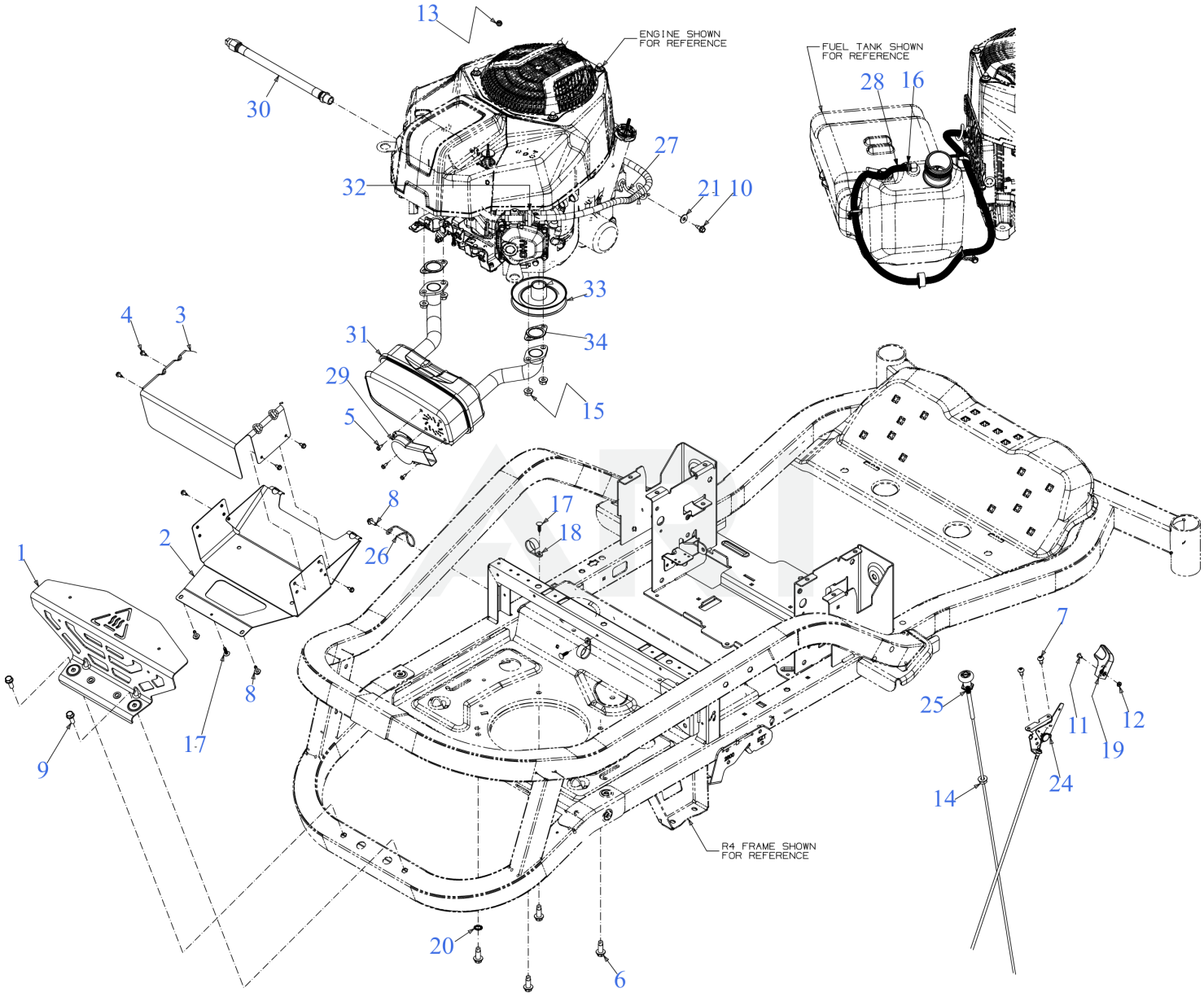

Page design © 2004-2017 by ARI Network Services, Inc.

Engine Accessories

Ref Number	Part Number	Part Description	Context Notes	Quantity
1	603P06299A	MUFFLER COVER (REAR) (BLACK)		1
1	728-05088	NUT RIVET 5/16-18 LOCK	(Not Shown)	2
2	703-16041A	MUFFLER SHIELD (LOWER)		1
3	703-16042A	MUFFLER SHIELD (TOP)		1
4	910-0224	HEX SCREW AB-TAP #10 x .50		6
5	710-0227	HEX SCREW WASHER HD #8-18 x 0.500		3
6	710-04683C	SCREW 3/8-16 x 1		4
7	710-05070A	SCREW 1/4-20 x .5		2
8	710-06133	SCREW M6-1 x .625		3
9	710-1238	SCREW 5/16-18 x .875 GR5		2
10	710-1652	SCREW 1/4-20X.625		1
11	710-3217	SCREW #8-32X.38 LG		1
12	712-0142	HEX NUT 8-32		1
13	912-0691	HEX NUT IK:M6		1
14	912-3005	HEX FLANGE NUT		1
15	712-3086	HEX FLANGE NUT M8X		4
16	726-0205	HOSE CLAMP 1/20		2
17	726-04099A	RATCHET CLIP (.188 x .85)		3
18	726-04119	DRAIN HOSE CLAMP		2
19	731-09637	THROTTLE CONTROL KNOB		1
20	736-0148	LOCK WASHER 3/8		1
21	736-0173	FLAT WASHER .28 ID x .74 OD x .063		1
24	746P05972A	THROTTLE CABLE 52.5LG		1
25	746P05992A	CHOKE CABLE 51.5		1
26	747-10050	HOSE GUIDE		1
27	747-10630	HOSE GUIDE		1
28	751-10349-45	FUEL HOSE LOW PERMEATION 45"		1

Ref Number	Part Number	Part Description	Context Notes	Quantity
29	751Z11053B	EXHAUST DEFLECTOR (LONG)		1
30	751-15324A	OIL DRAIN HOSE (11.26" 3/8 NPT)		1
31	751P15807A	MUFFLER		1
32	951-3013	FUEL FILTER		1
32	490-202-M002	Genuine Factory Parts FUEL FILTER	Retail Packaged Part	
33	756-04494B	TRANSMISSION DRIVE PULLEY		1
34	921-04936	EXHAUST GASKET		1
		OIL:SAE 10W30		

Evap Hose

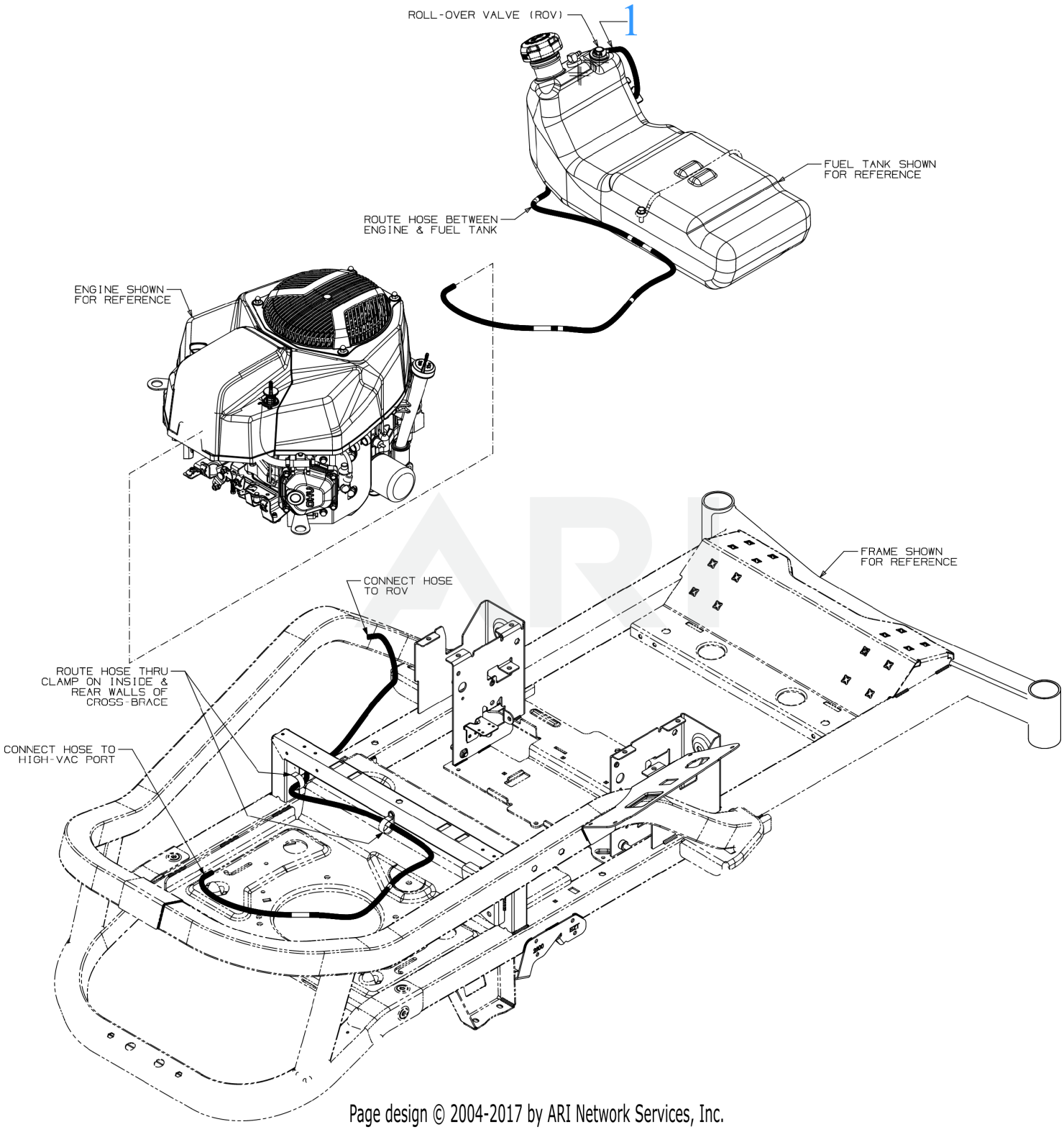

Page design © 2004-2017 by ARI Network Services, Inc.

Evap Hose

Ref Number	Part Number	Part Description	Context Notes	Quantity
1	751-12089-65	VENT HOSE 3/16 ID 65"LG		

Floor Board

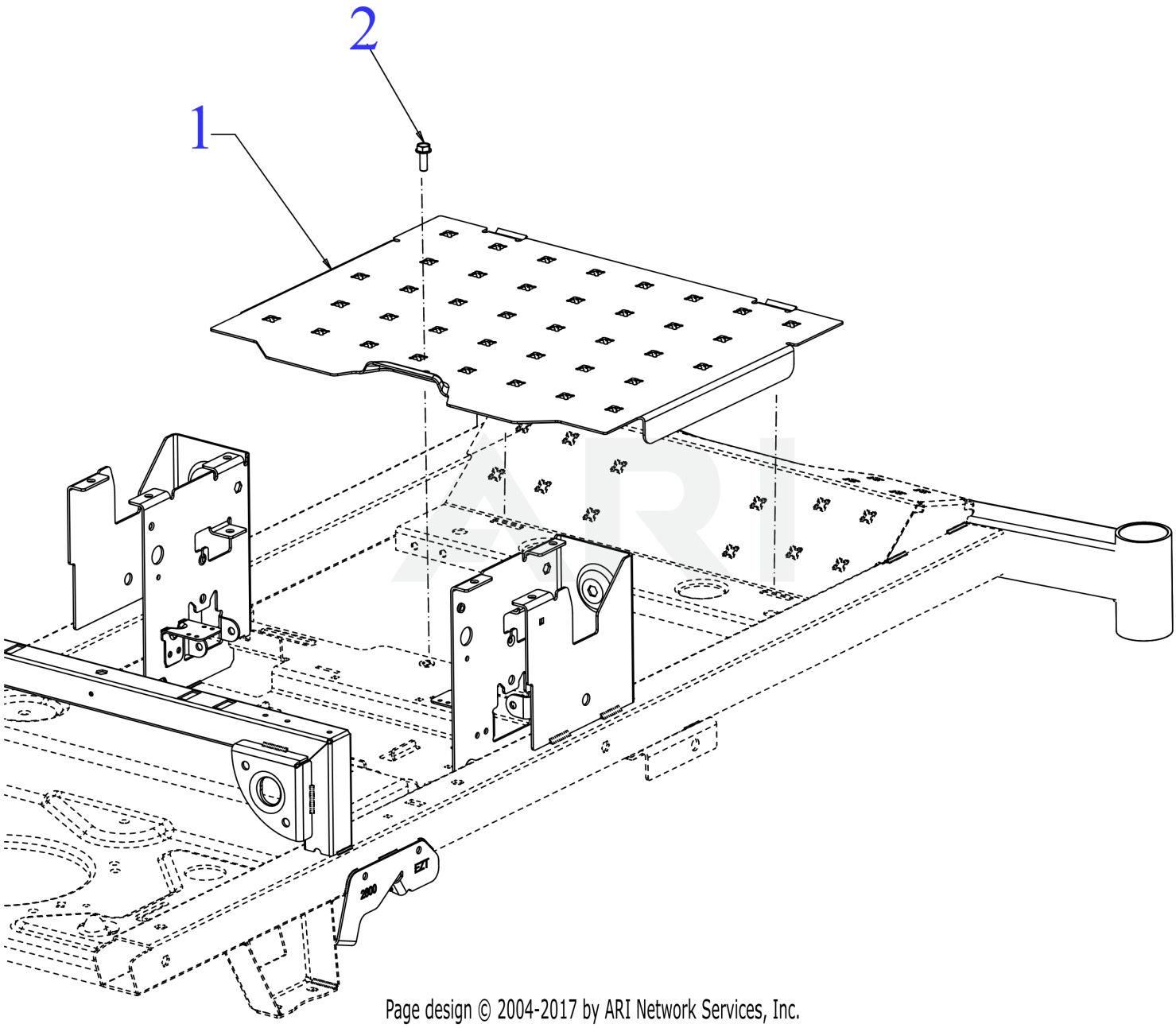

Page design © 2004-2017 by ARI Network Services, Inc.

Floor Board

Ref Number	Part Number	Part Description	Context Notes	Quantity
1	703-12684	FLOORBOARD	*CHOOSE COLOR WHEN ORDERING*	1
2	710-1238	SCREW 5/16-18 x .875 GR5		1

Frame

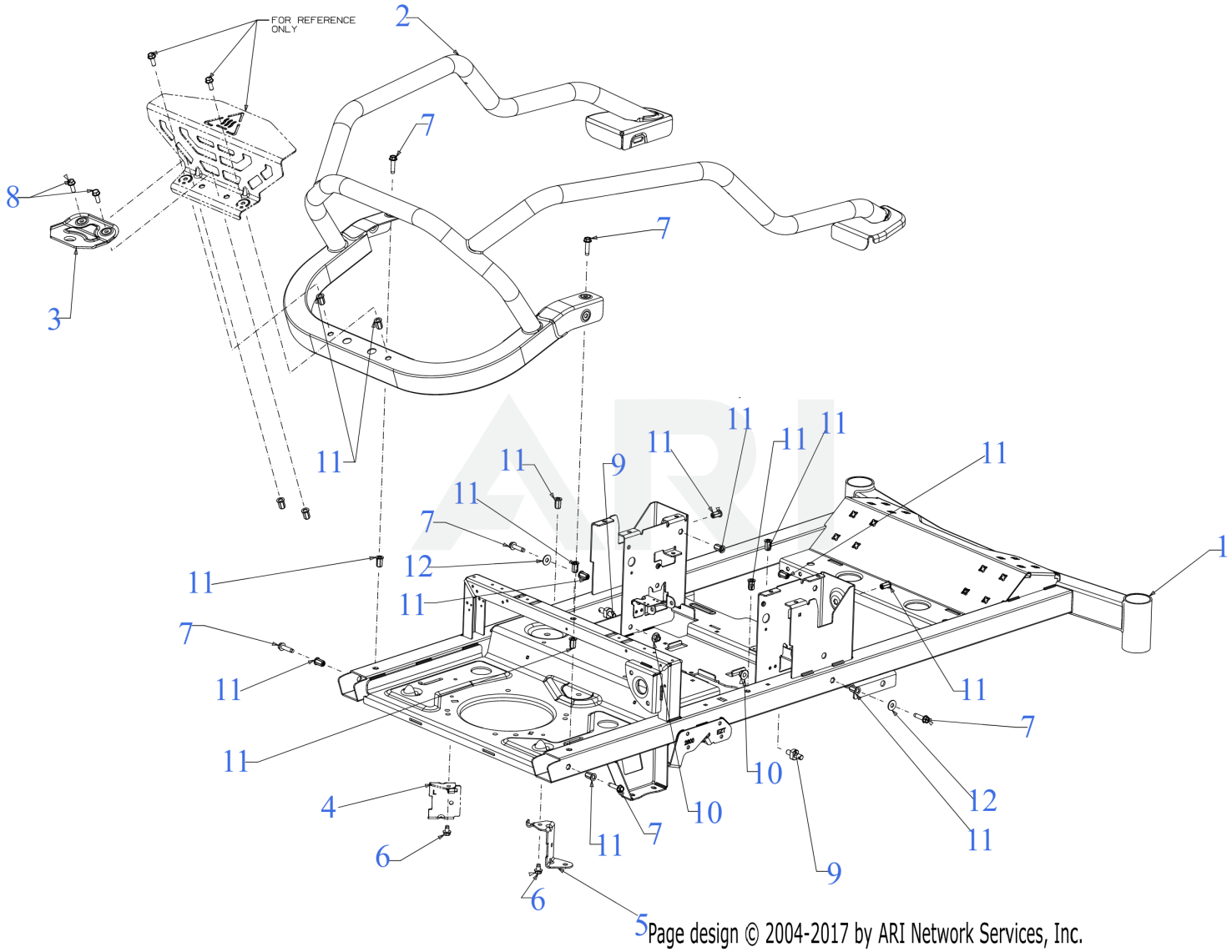

Page design © 2004-2017 by ARI Network Services, Inc.

Frame

Ref Number	Part Number	Part Description	Context Notes	Quantity
1	603-05640A	FRAME	*CHOOSE COLOR WHEN ORDERING*	1
2	603-05860	UPPER FRAME	*CHOOSE COLOR WHEN ORDERING*	1
3	703-12302	HITCH PLATE	*CHOOSE COLOR WHEN ORDERING*	1
4	703-12963	TRANSMISSON MOUNT SUPPORT (LH)	*CHOOSE COLOR WHEN ORDERING*	1
5	703-13882	TRANSMISSON MOUNT SUPPORT (RH)	*CHOOSE COLOR WHEN ORDERING*	1
6	710-0607	SCREW 5/16-18 x .500		2
7	710-0817	SCREW 5/16-18 x 1.25		6
8	710-1238	SCREW 5/16-18 x .875 GR5		2
9	711-09802	SHOULDER STUD		2
10	712-04065	NUT		2
11	728-05043	NUT RIVET 5/16-18		16
12	736-0159	FLAT WASHER		2

Front Caster

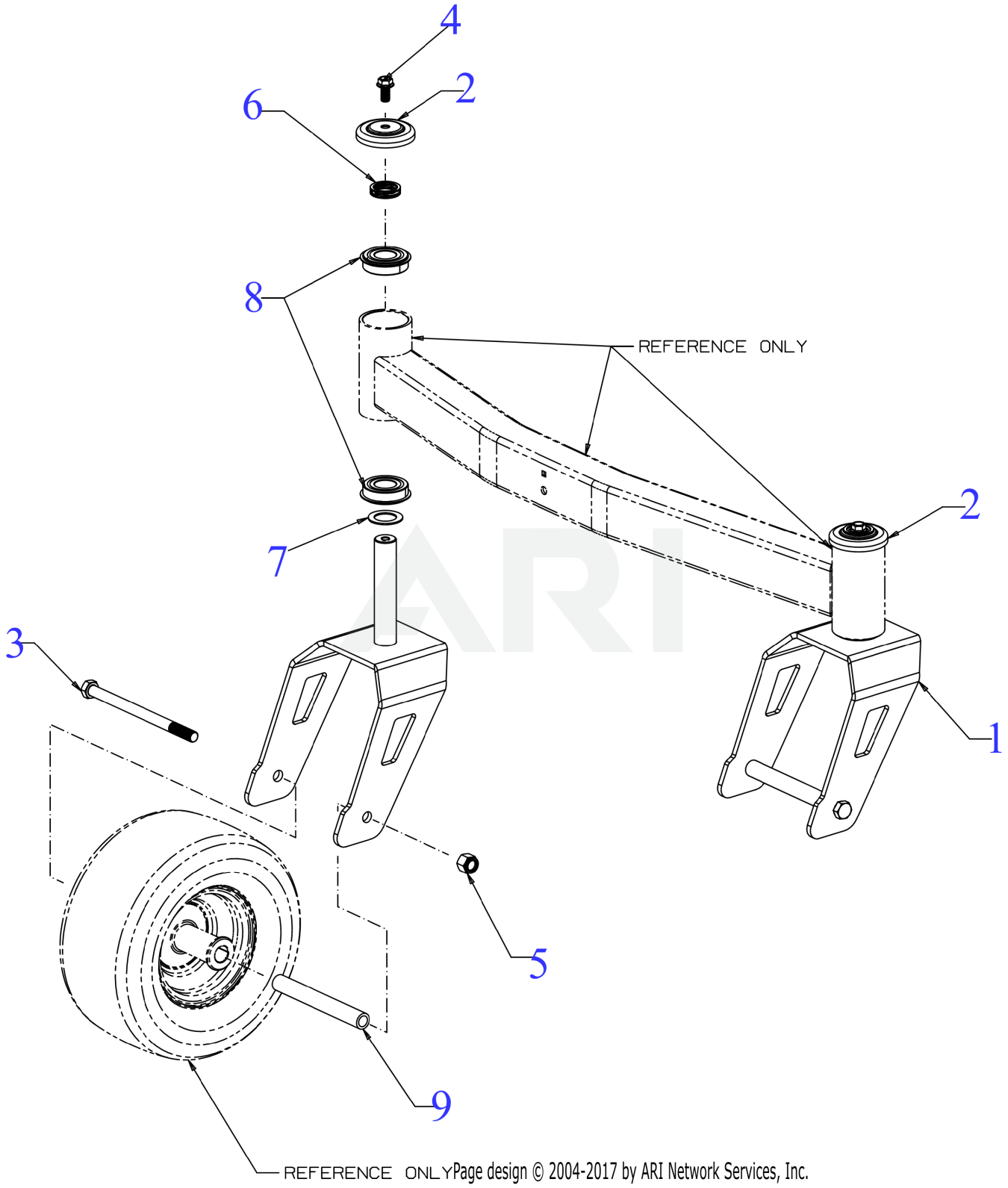

Page design © 2004-2017 by ARI Network Services, Inc.

Front Caster

Ref Number	Part Number	Part Description	Context Notes	Quantity
1	603-05839	CASTER WHEEL YOKE	*CHOOSE COLOR WHEN ORDERING*	2
2	703-11503B	AXLE CAP		2
3	710-04652	BOLT 1/2-20 x 7.25 GR5		2
4	710-06551	BOLT - 3/8-16:.75:GR5:PATCH LOCK		2
5	712-04316	NUT		2
6	736-05033A	WAVE WASHER		2
7	736-0745	WASHER 1.010X1.560X.060		2
8	941-05022A	BALL BEARING 25X52X15		4
9	750-07010	CASTER AXLE SPACER		2

Fuel Tank

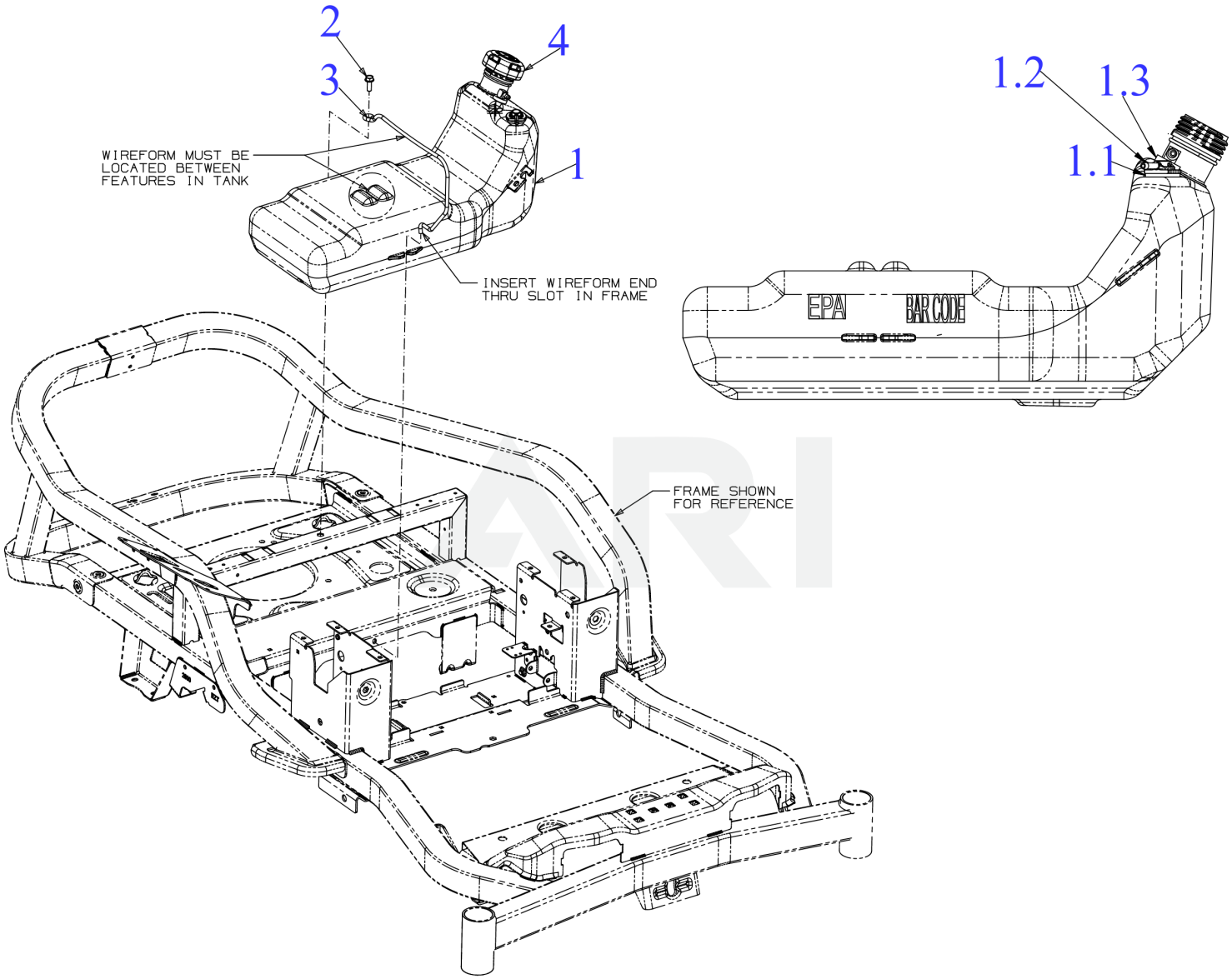

Page design © 2004-2017 by ARI Network Services, Inc.

Fuel Tank

Ref Number	Part Number	Part Description	Context Notes	Quantity
1	651P05835A	FUEL TANK (3.5 GAL)		1
1.1	735-04081	RUBBER GROMMET 23.0 ID x 35.5 OD		
1.2	751-12118	ROLLOVER FUEL VALVE		
1.3	935-0149	BUSHING		
2	710-1238	SCREW 5/16-18 x .875 GR5		1
3	747-07670	FUEL TANK RETAINER		1
4	751-12179C	FUEL CAP W/TETHER		1

Hour Meter

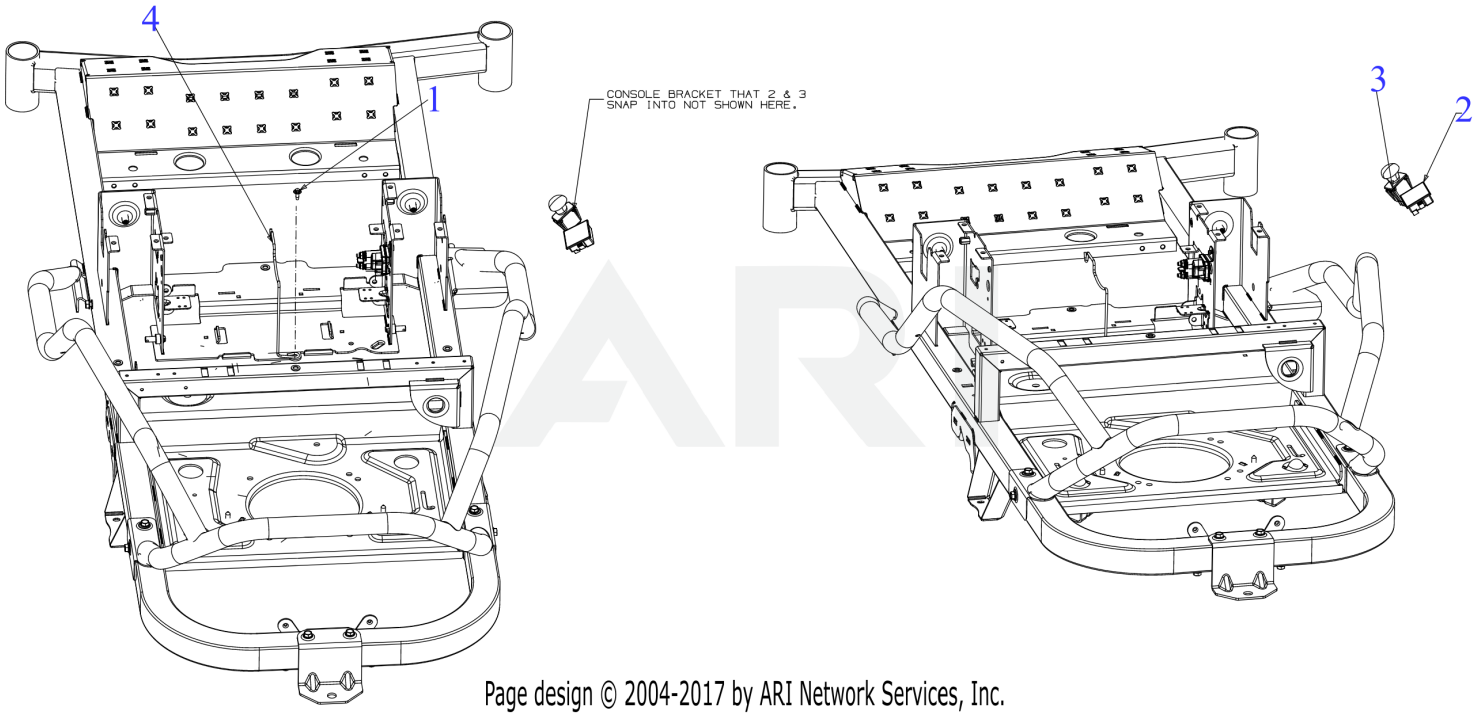

Page design © 2004-2017 by ARI Network Services, Inc.

Hour Meter

Ref Number	Part Number	Part Description	Context Notes	Quantity
1	710-06133	SCREW M6-1 x .625		1
2	925-06170A	HOUR METER/SERVICE MINDER		1
2	490-900-C075	Cub Cadet HOUR METER KIT	Retail Packaged Part	
2	490-900-Y075	Troy-Bilt HOUR METER KIT	Retail Packaged Part	
3	925-3233A	PTO SWITCH (YELLOW KNOB)		1
4	747-08170	BATTERY RETAINER		1

Key

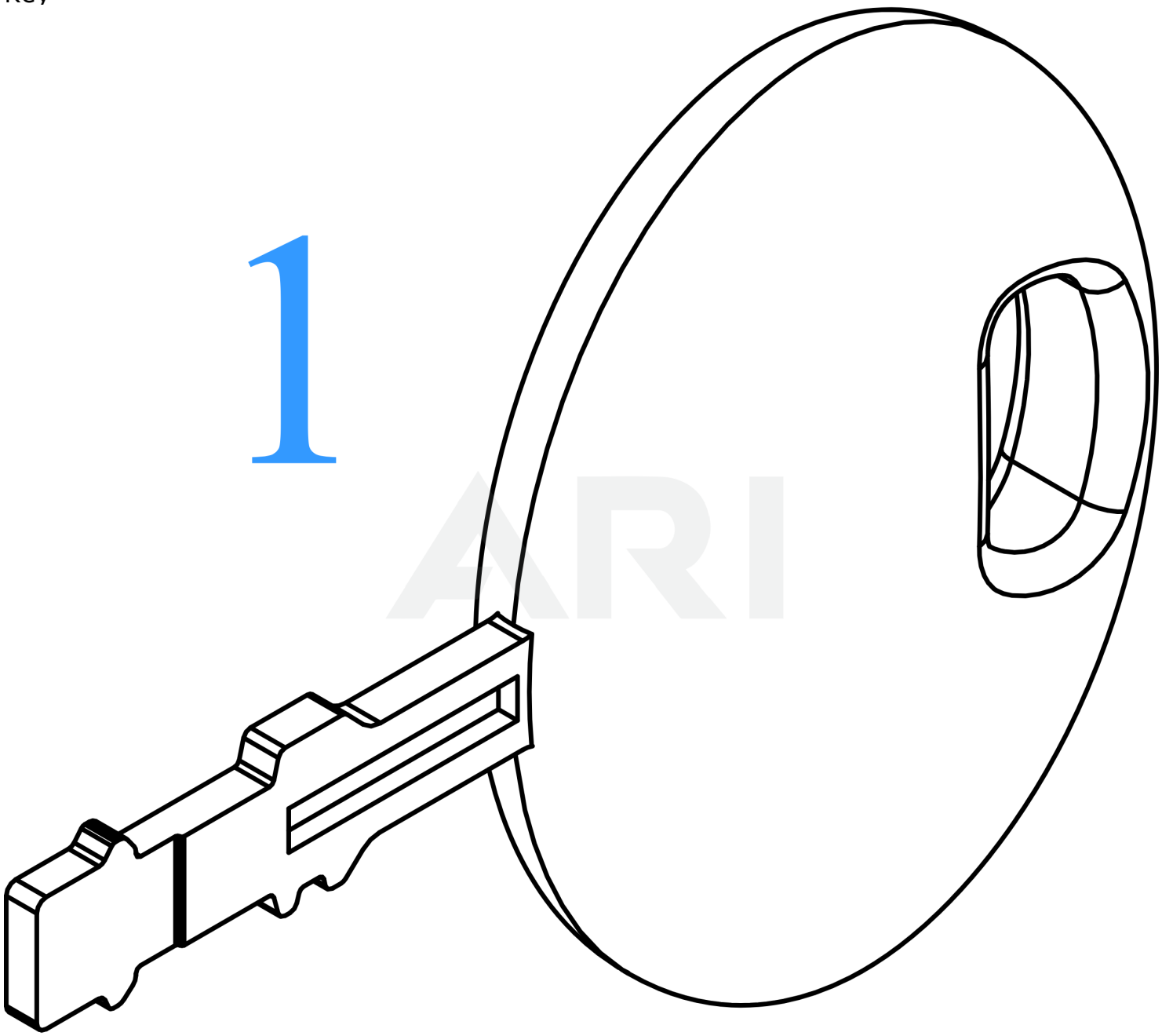

Page design © 2004-2017 by ARI Network Services, Inc.

Key

Ref Number	Part Number	Part Description	Context Notes	Quantity
1	925-1745A	IGNITION KEY		1

Label Map

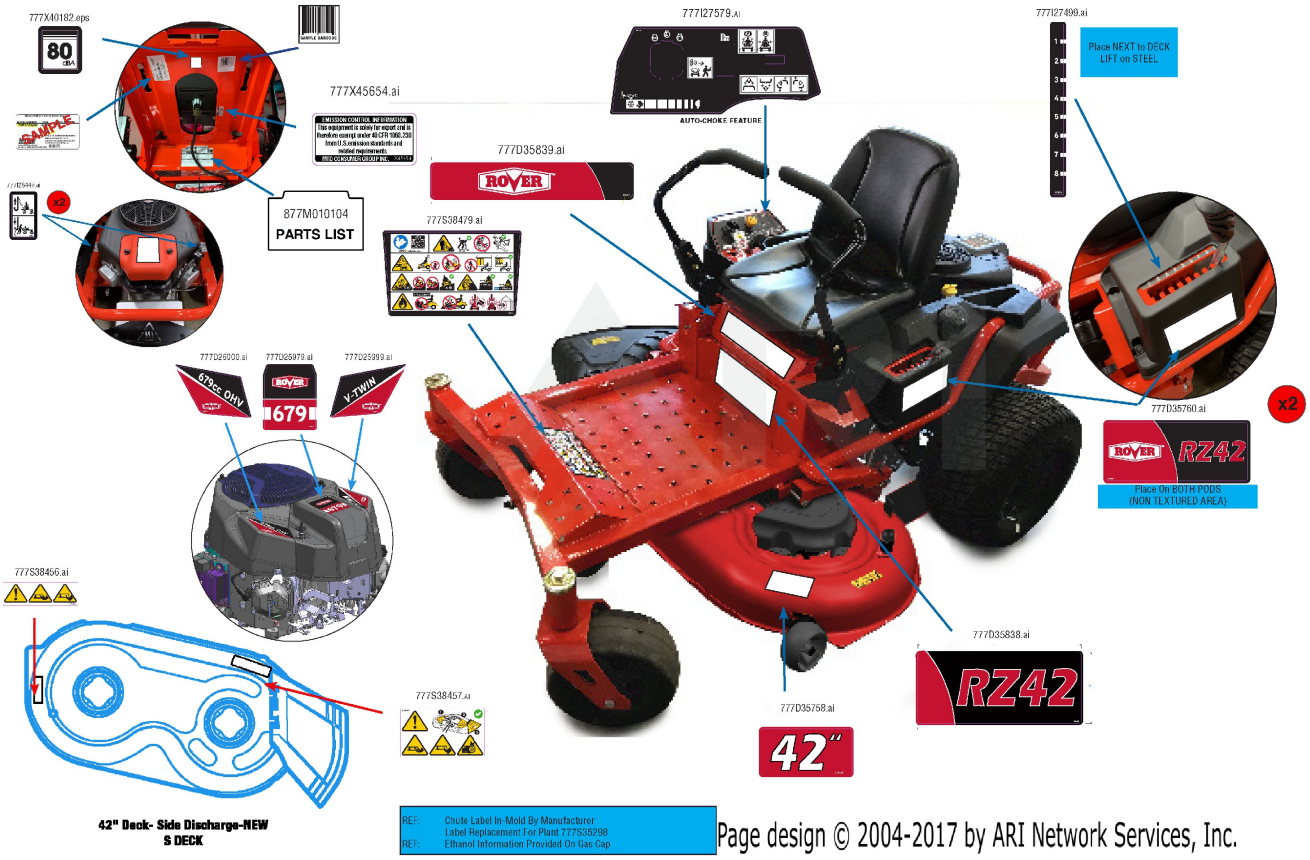

Page design © 2004-2017 by ARI Network Services, Inc.

Label Map

Ref Number	Part Number	Part Description	Context Notes	Quantity
	777D35760	LABEL-ROVER RZ42 RH/LH POD RZ19		
	777D35758	LABEL-42" DECK ROVER EXP RZ19		
	777D35838	LABEL-RZ42 SEAT BOX ROVER EXP RZ19		
	777D35839	LABEL-ROVER LOGO EXP RZ19		
	777D25979	LABEL-ROVER 679 ENG EXP RZ19		
	777D25999	LABEL-V TWIN ROVER ENG EXP RZ19		
	777D26000	LABEL-679CC OHV ROVER ENG EXP RZ19		
	777I27499	LABEL-DECK HEIGHT 8 POSITION RZ19		
	777I27579	LABEL-CONTROL PANEL AUTO CHOKE RZ19		
	777I26440	LABEL-HYDRO DUMP RZ19		
	777S38456	LABEL-SAFETY HAZARD RZ19		
	777S38457	LABEL-CHUTE/BELT CVR SAFETY RZ19		
	777S38479	LABEL-SAFETY FRNT PLT FLRBORD RZ19		
	777X40182	LABEL-80 DBA		
	777X45654	LABEL-RDR EMISSIONS EXPORT		

Lap Bars

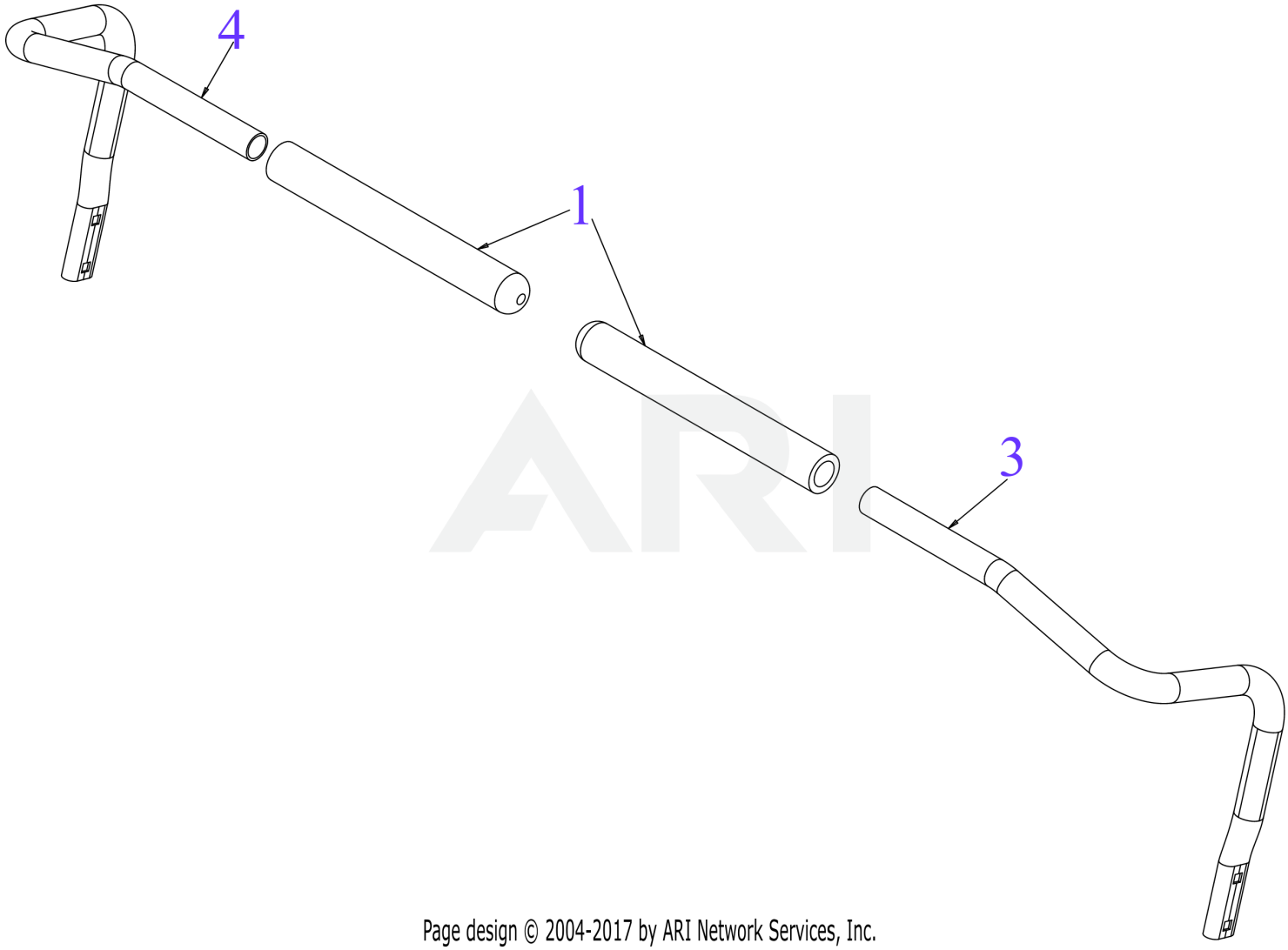

Page design © 2004-2017 by ARI Network Services, Inc.

Lap Bars

Ref Number	Part Number	Part Description	Context Notes	Quantity
1	720-05171	LAPBAR GRIP 1.430OD x 10.62		2
3	749-06274	LAPBAR (RH)	*CHOOSE COLOR WHEN ORDERING*	1
4	749-06334	LAPBAR (LH)	*CHOOSE COLOR WHEN ORDERING*	1

Lapbar Adjustment

Page design © 2004-2017 by ARI Network Services, Inc.

Lapbar Adjustment

Ref Number	Part Number	Part Description	Context Notes	Quantity
1	720-05521	HAND KNOB 5/16-18		2

Lift Assist

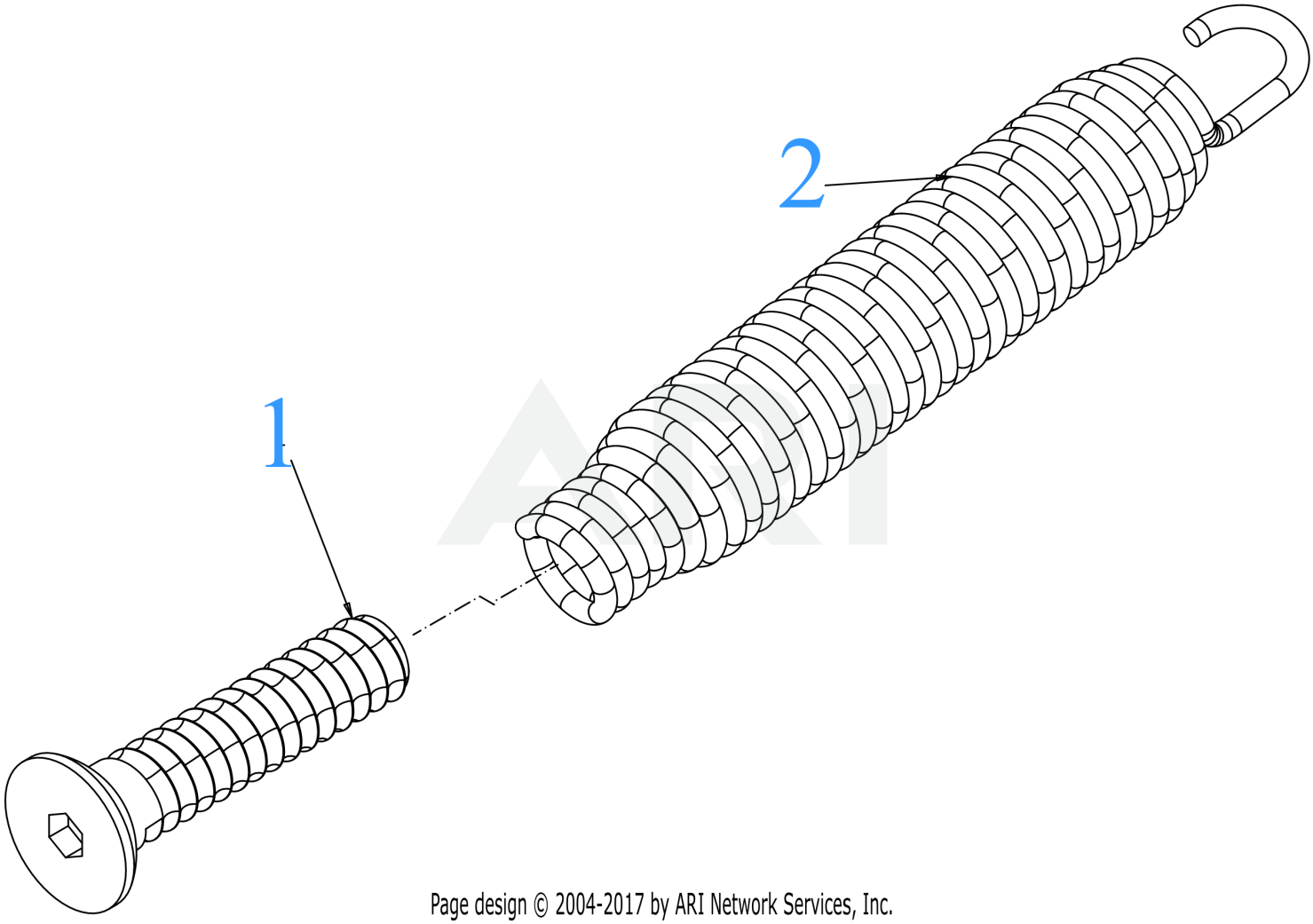

Page design © 2004-2017 by ARI Network Services, Inc.

Lift Assist

Ref Number	Part Number	Part Description	Context Notes	Quantity
1	711-08521	SPRING INSERT		1
2	732-05241A	LIFT ASSIST SPRING (SMALL)		1

Operator Control

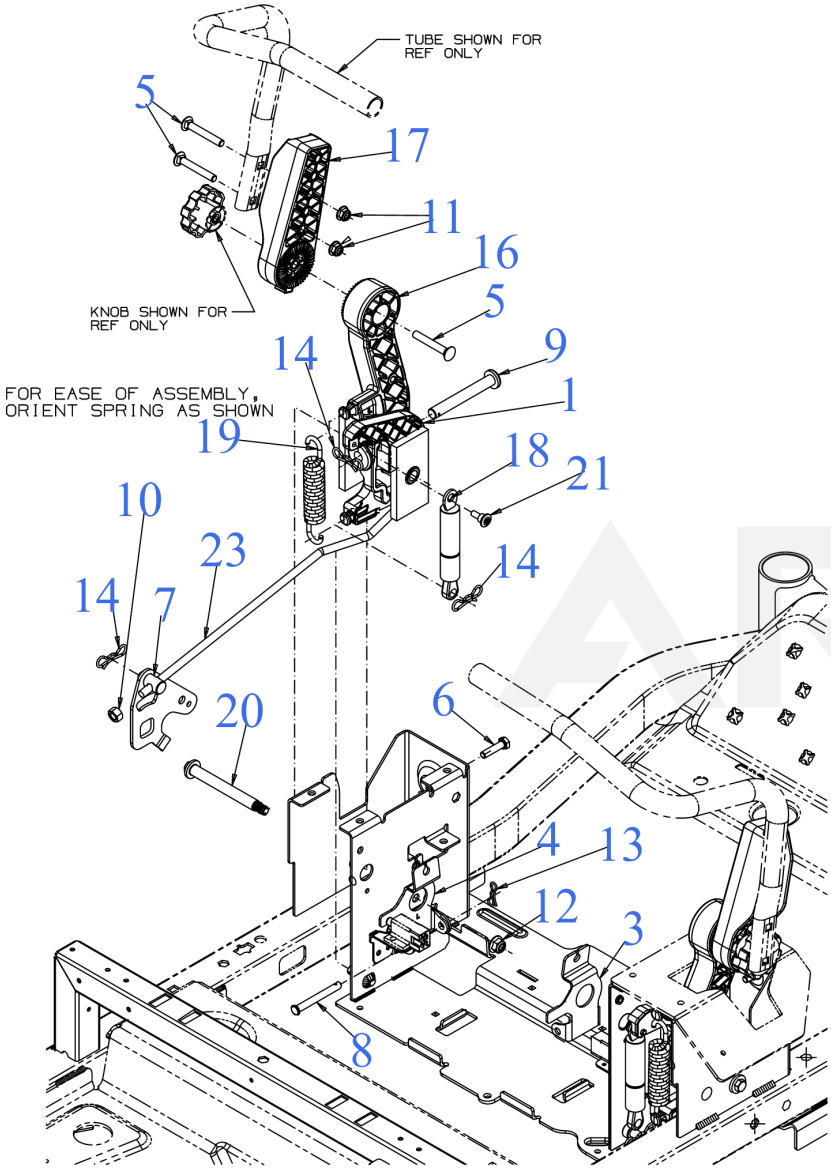

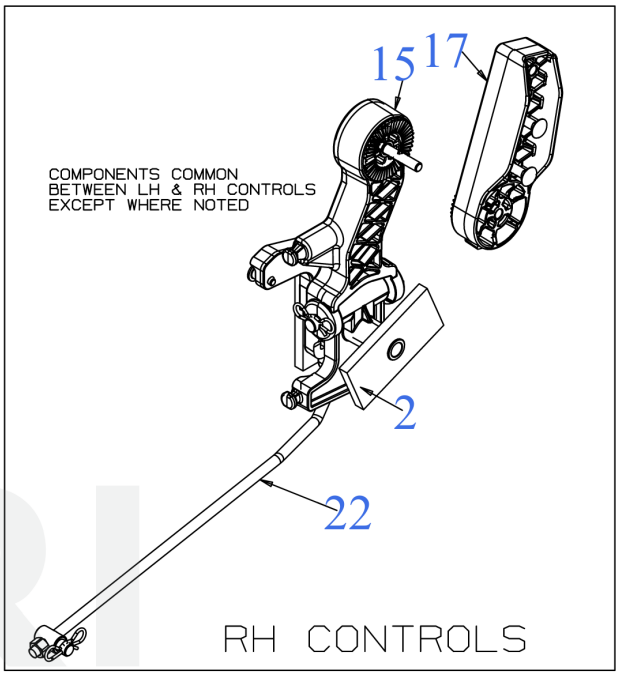

Page design © 2004-2017 by ARI Network Services, Inc.

Operator Control

Ref Number	Part Number	Part Description	Context Notes	Quantity
1	619-05550	CONTROL ACTUATOR (LH)		1
1	741-0748	FLANGE BUSHING	(Not Shown)	2
2	619-05551	CONTROL ACTUATOR (RH)		1
2	741-0748	FLANGE BUSHING	(Not Shown)	2
3	703-13761A	BRAKE CABLE LEVER (RH)		1
4	703-15661A	BRAKE CABLE LEVER (LH)		1
5	710-0572	BOLT 5/16-18 x 2.50 GR1		6
6	710-08694	SCREW 5/16-18 x 1.25 GR5		2
7	711-07921	CONTROL ROD FERRULE		2
8	911-0813	CLEVIS PIN 5/16 DIA		2
9	711-1206	CLEVIS PIN		2
10	712-0241	HEX NUT 3/8-24		2
11	712-04063	FLANGE LOCK NUT 5/16-18		4
12	712-04065	NUT		2
13	714-04040	BOW TIE COTTER PIN 1/4-5/16		2
14	714-05005	BOW TIE COTTER PIN		6
15	719-05614	LAPBAR ACTUATOR (RH)		1
16	719-05752	LAPBAR ACTUATOR (LH)		1
17	719-05893	UPPER ADJUSTMENT HANDLE		2
18	727-05274A	DAMPNER CYLINDER		2
19	732-05966A	EXTENSION SPRING .57 x 5.38		2
20	738-05694	SHOULDER SCREW .491x3.937 3/8-16		2
21	738-06055	SHOULDER SCREW .394X.280:1/4-14		2
22	747-07430	HYDRO CONTROL ROD (RH)		1
23	747-07870	HYDRO CONTROL ROD (LH)		1

Platform

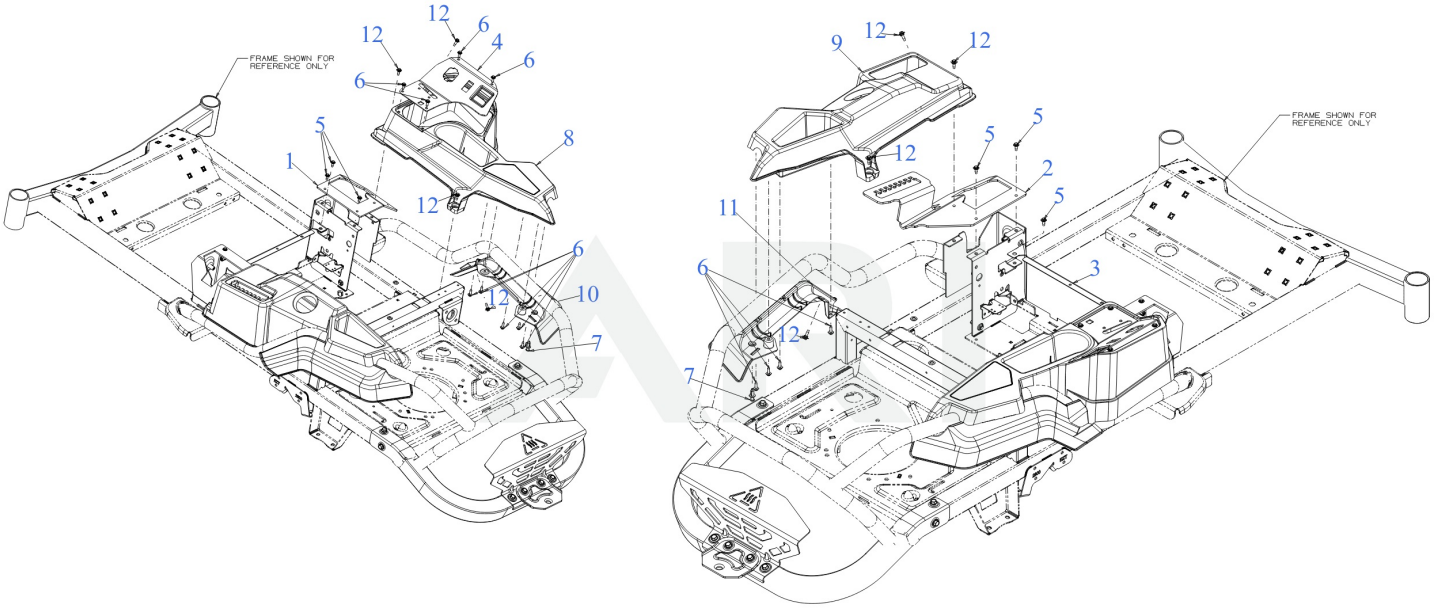

Page design © 2004-2017 by ARI Network Services, Inc.

Platform

Ref Number	Part Number	Part Description	Context Notes	Quantity
1	703-13223	CONTROL BRACKET (RH)	*CHOOSE COLOR WHEN ORDERING*	1
2	703-21544	HEIGHT INDEX BRACKET (LH)	*CHOOSE COLOR WHEN ORDERING*	1
3	703-13225	SEAT BOX FRONT PLATE	*CHOOSE COLOR WHEN ORDERING*	1
4	703-15581	CONSOLE COVER (RH)	*CHOOSE COLOR WHEN ORDERING*	1
5	710-06133	SCREW M6-1 x .625		6
6	710-06147	SCREW 1/4-10 x .750		13
7	728-0199	PLASTIC RIVET		2
8	731P15331	CONSOLE (RH)		1
9	731P15332	CONSOLE (LH)		1
10	731P15333	FENDER CONSOLE (RH)		1
11	731P15334	FENDER CONSOLE (LH)		1
12	738-05090	SHOULDER SCREW M6-1 .368 X.115		8

Seat

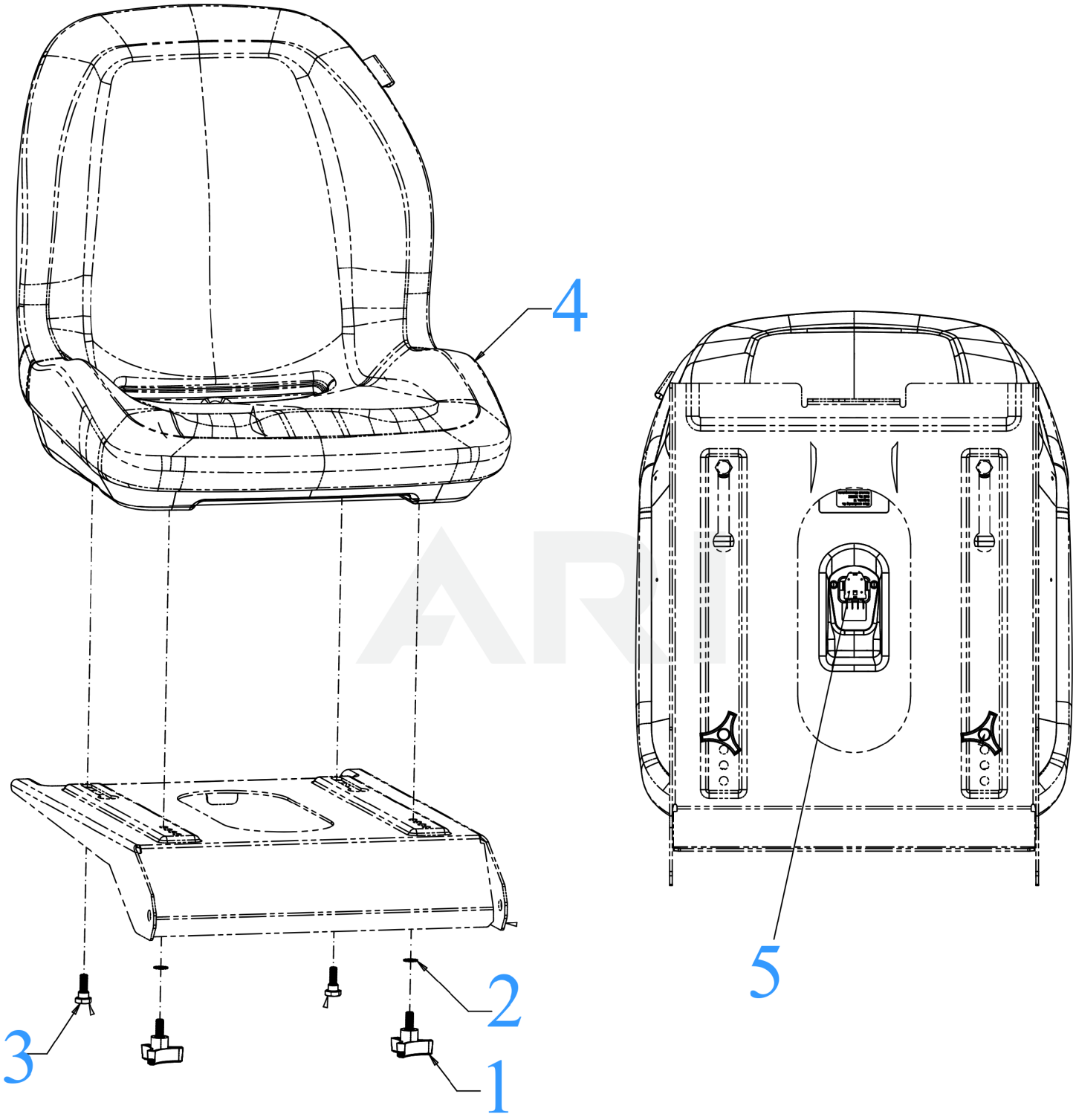

Page design © 2004-2017 by ARI Network Services, Inc.

Seat

Ref Number	Part Number	Part Description	Context Notes	Quantity
1	720-05381	3 PRONG KNOB 5/16-18		2
2	736-0607	WASHER		2
3	738-0296	SHOULDER SCREW .437		2
3	736-3081	FLAT WASHER ID-.320 x .598	(Not Shown)	2
4	757-05887	18" SEAT (4 PT MT)		1
4	759-04252	LH & RH ARMREST KIT	(Not Shown)	
5	725P14006	SEAT SWITCH (NC/NO)		1

Seat Adjustment

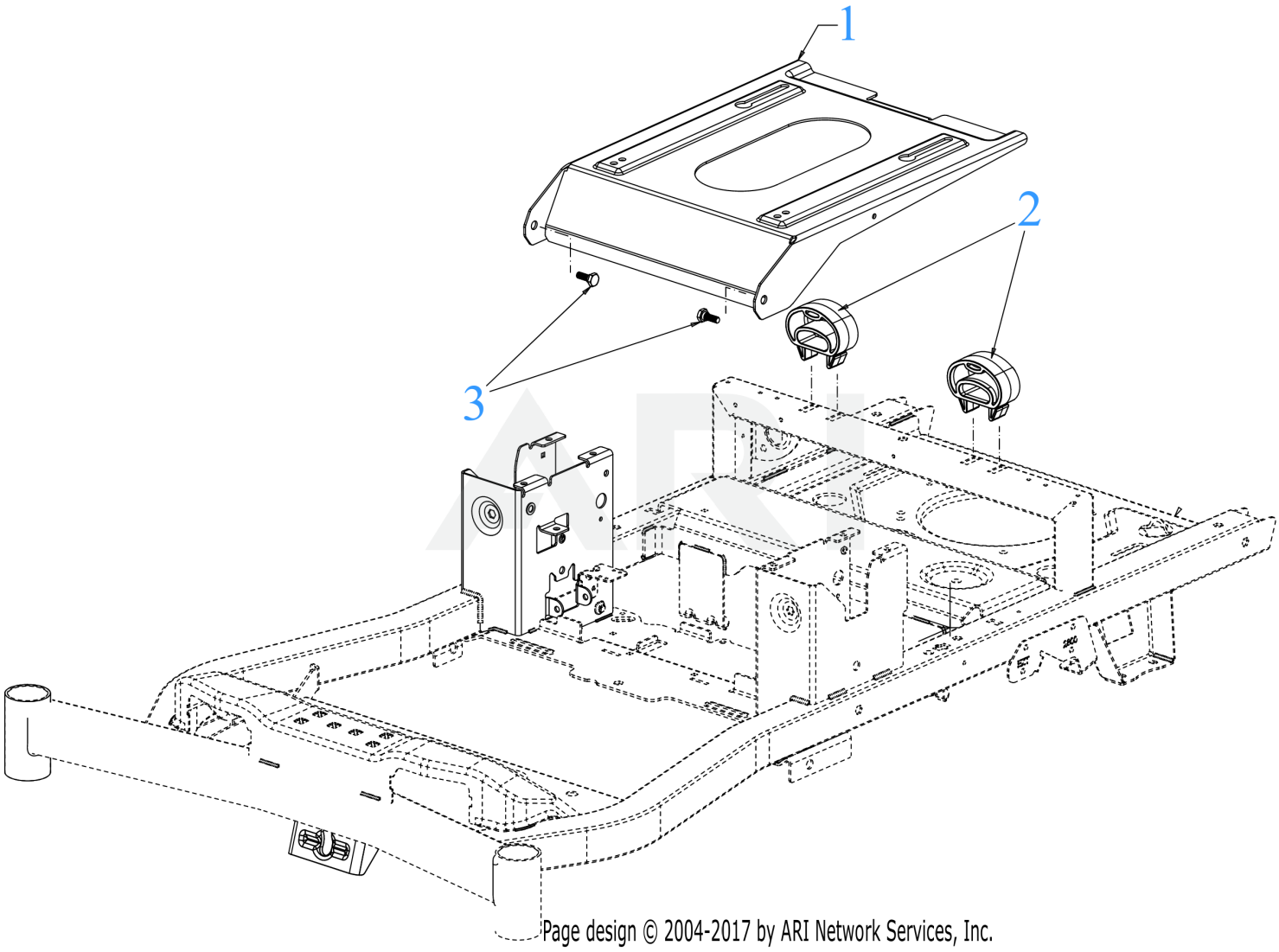

Seat Adjustment

Ref Number	Part Number	Part Description	Context Notes	Quantity
1	703-19726	SEAT BASE PLATE	*CHOOSE COLOR WHEN ORDERING*	1
2	735-05499	POLYMER SEAT SPRING		2
3	738-05190B	SHOULDER SCREW .44DIAx.18 5/16-18		2

Spindle

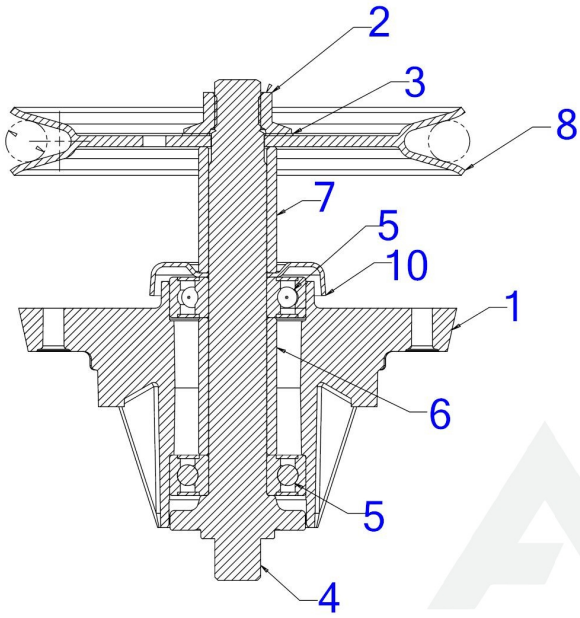

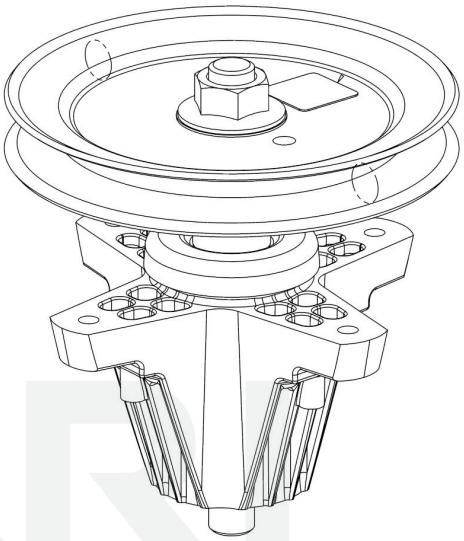

Page design © 2004-2017 by ARI Network Services, Inc.

Spindle

Ref Number	Part Number	Part Description	Context Notes	Quantity
1	619-04183B	DECK SPINDLE HOUSING		1
2	712-05134	FLANGE NUT 5/8-18		1
3	936-0351	THRUST WASHER		1
4	738-1186A	BLADE SPINDLE SHAFT STAR 6.11 LG		1
5	941-0919B	BALL BEARING		2
6	750-04936	SPACER- .792 x 1.060 x 1.860		1
7	750-06390	SPACER .792 x 1.060 x 1.712		1
8	756-05111	SPINDLE PULLEY 6.3 DIA		1
10	783-08435	SHIELD-BRG DECK		1
	918-04822B	SPINDLE ASSEMBLY		1
	490-130-C002	Cub Cadet SPINDLE ASSEMBLY	Retail Packaged Part	

Wheel - Rear

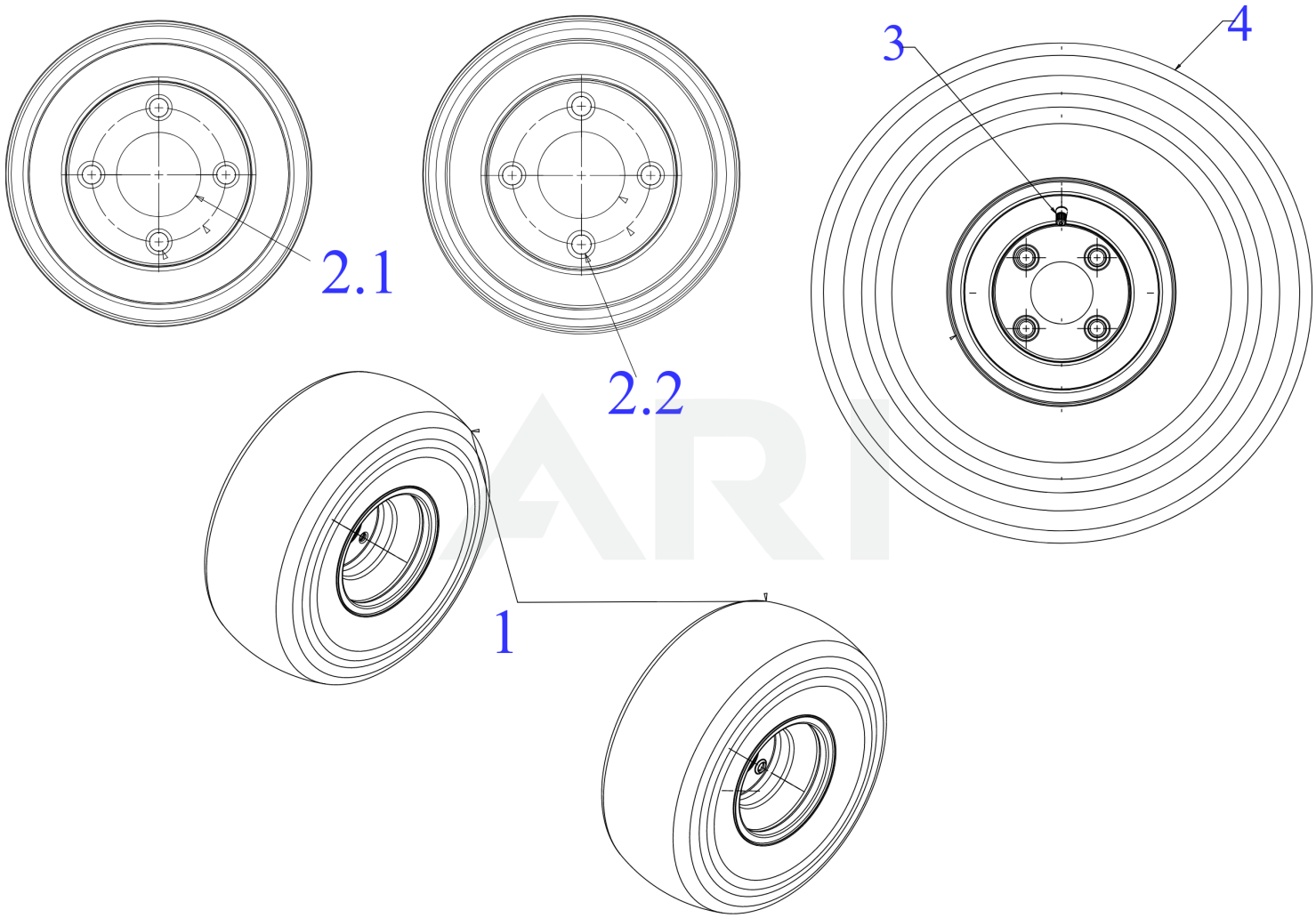

Page design © 2004-2017 by ARI Network Services, Inc.

Wheel - Rear

Ref Number	Part Number	Part Description	Context Notes	Quantity
1	634Z05924	COMPLETE WHEEL (20x8-8) TURFMASTR	*CHOOSE COLOR WHEN ORDERING*	2
1	634Z07264	COMPLETE WHEEL 20x8-8 (TURFMASTER)	Without Beadlock*CHOOSE COLOR WHEN ORDERING*	2
2.1	603-04175	REAR RIM ASSEMBLY	*CHOOSE COLOR WHEN ORDERING*	2
2.2	603-07581	REAR RIM ASSEMBLY	Without Beadlock *CHOOSE COLOR WHEN ORDERING*	2
3	934-0255	TUBELESS AIR VALVE		2
4	734-05745	TIRE (20x8-8) TURFMASTR		2

Wheel-Front

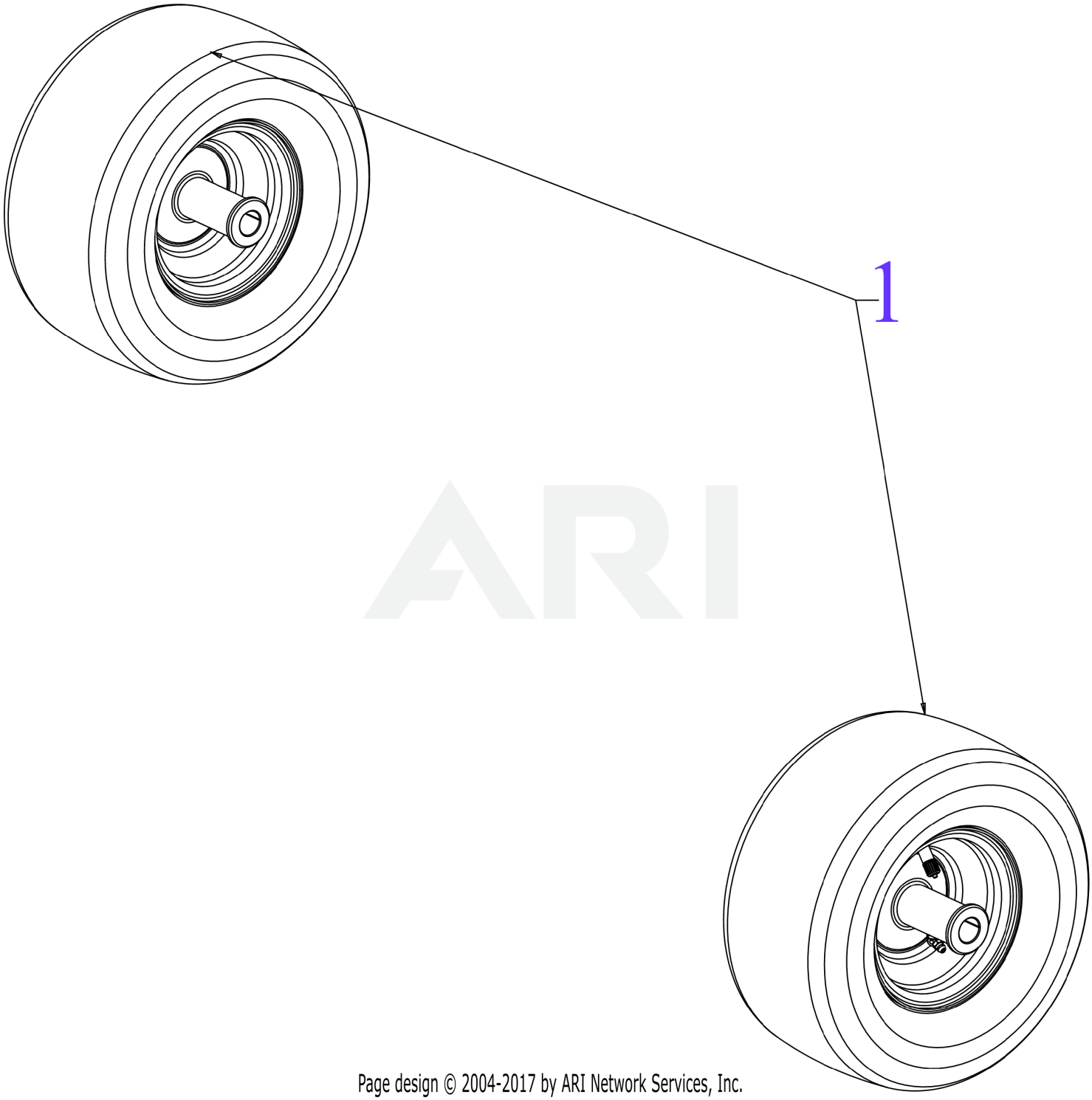

Page design © 2004-2017 by ARI Network Services, Inc.

Wheel-Front

Ref Number	Part Number	Part Description	Context Notes	Quantity
1	634-05664A	CASTER WHEEL (BLACK)		2
	741-05094	FLANGE BEARING		